STANDARD SPECIFICATIONS

For

STREET CONSTRUCTION

CITY OF
CARTHAGE, MISSOURI

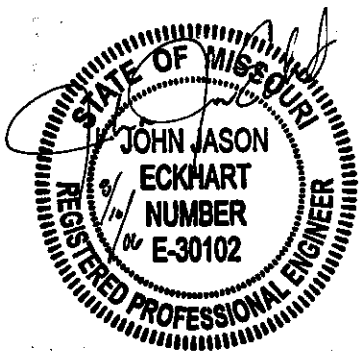

Prepared By

Sprenkle and Associates, Inc.

CONSULTING ENGINEERS & SURVEYORS

1745 South Garrison, Carthage, Missouri

August 2006

INDEX

STREET CONSTRUCTION

DIVISION 1 - GENERAL	SECTION
Definitions	01000
General	01010
Cleaning	01710
DIVISION 2 – SITE WORK	
Clearing and Grubbing	02102
Removal of Existing Improvements	02125
Earthwork	02200
Subgrade Compaction	02210
Trenching, Backfilling, and Compacting	02221
Granular Stone Bedding and Backfill	02222
Soil Compaction Control	02230
Granular Stone Base	02232
Compaction Control and Testing	02250
Finish Grading	02260
Surface Restoration	02480
Asphaltic Concrete Paving	02513
Roadway Surface and Sidewalk Replacement	02575
Storm Sewer Systems	02721
DIVISION 3 – CONCRETE	
Concrete Formwork	03100
Concrete Reinforcement	03200
Cast-in-Place Concrete	03300
Precast Manholes and Catch Basins	03405

STANDARD DRAWINGS

Roadway – Typical Section
Pavement Repair
- Asphaltic Concrete
- Portland Cement Concrete
- Chip and Seal
- Crushed Stone

Standard Trench and Bedding Detail
Sidewalk Installation Detail
Handicap Ramp Installation Detail 1
Handicap Ramp Installation Detail 2
Handicap Ramp Installation Detail 3
Driveway Entrance Detail
Standard Curb and Gutter Detail
Depressed Curb and Gutter Detail
Gutter Detail
Curb Flume Detail
Type "B" Single Curb Inlet Detail

DIVISION 1 - GENERAL

DEFINITION OF TERMS.....01000

1. City: City of Carthage, Missouri, a municipal corporation.

2. Engineer: Registered Professional Engineer currently holding position of City Engineer, whether contracted or city employee.

3. Public Works Director: The Public Works Director of the City of Carthage, Missouri, only appointed and holding office at the time of execution of a contract, or during the fulfillment thereof, or such persons or official as may succeed to the duties of the Public Works Director. The Public Works Director is the representative of the City of Carthage, Missouri. The Public Works Director may appoint an inspector, or delegate his/her authority to subordinate, and any instructions issued by such representative shall have the same force and effect as if given by the Public Works Director in person.

4. Owner: Individual, firm, association, or corporation recorded as the legal owner of the property being developed under the "Standard Specifications for Street Construction, City of Carthage, Missouri."

5. A.S.T.M.: American Society for Testing Materials.

6. A.A.S.H.T.O.: American Association of State Highway Officials.

1. GENERAL

1.1 Standard specifications for the work shall consist of the "Standard Street Specifications" of the City of Carthage, and specific sections from the "Standard Specifications for Highway Construction" of the Missouri Highway and Transportation Commission.

1.2 A Performance and Maintenance Bond shall be on file with the Public Work's Department prior to the start of the public improvement construction.

1.2.1 The Performance and Maintenance Bond shall be for the cost of the public improvement construction.

1.2.2 The Performance Bond shall be in effect until project completion. The Maintenance Bond shall be effective for a 12-month period following project completion and acceptance by the City of Carthage.

1.3 No public improvement project construction shall begin until a set of engineering drawings of the proposed construction; sealed by a licensed professional engineer registered in the State of Missouri, is received by the City of Carthage and approved by signature of the Public Works Director or his designee.

1.4 Any public improvement which will be located in a State of Missouri right-of-way shall be permitted first by the Missouri Department of Transportation (MoDOT) before being considered by the City of Carthage. A copy of the MoDOT permit shall be supplied to the City of Carthage.

1.5 All public improvement construction shall be performed in accordance with specifications listed herein and shall be inspected and documented by the City of Carthage Public Works Department.

1.6 If the public improvement construction is required to be done after normal working hours, or on weekends or holidays, all overtime pay for Public Works inspector shall be paid for by the contractor. Failure to pay overtime fees shall result in a claim against the project Performance Bond.

1.7 The contractor or owner will be responsible for the repair/replacement of any City facilities damaged during construction. Failure to repair/replace damaged City facilities will result in a claim against the contractor/owner's liability insurance policy.

1.8 For new construction projects, an emergency contact with a 24 hour telephone numbers must be on file in case of emergency.

2. STREET IMPROVEMENTS

2.1 Streets, curbs and gutters shall be improved to comply with the standards contained herein, in the city street and storm sewer specifications and design standards, and all design standards and specifications now or hereafter promulgated by the Public Works Director or adopted by the Council, in accordance with the final construction plans required to be approved prior to final plat approval.

2.2 Responsibility for improvements costs. It is the policy of the City to participate in or contribute to only certain additional costs of construction of major thoroughfares over and above the normal costs of local standard streets, when streets are designated at higher standards by the City. Such participation, and its timing, is not mandated and is solely at the election of the Council, according to the needs of the community.

2.3 Arrangement. All thoroughfares shall be located properly with respect to extending existing and platted streets, to special traffic generators, to population densities, and to the pattern of existing and proposed land uses.

2.3.1 Local streets shall be arranged so as to discourage use by through traffic, to permit efficient drainage and utility systems, and to require the minimum number of streets necessary to

provide convenient and safe access to all properties. The use of curvilinear streets, cul-de-sacs, or U-shaped streets shall be encouraged where such use will result in a more desirable layout.

2.3.2 Where a subdivision abuts or contains an existing arterial street or highway having limited access, the commission may require the arrangement of residential lots with rear yards abutting the major street, or the provision of marginal access roads, or other such treatment as may be necessary in order to provide for adequate protection of residential properties, to afford separation of through and local traffic, and to provide for suitable access to the property involved.

2.3.3 When a new subdivision adjoins unplatted or undeveloped lands, the new streets shall be carried to the boundaries of such land as appropriate. A temporary turnaround approved by the Public Works Director shall be installed at this point, except when the terminus of the street is less than two hundred (200) feet from an intersecting right-of-way.

2.3.4 Private drives may be allowed only to provide internal circulation within a single lot or parcel.

2.4 Blocks. Streets should generally intersect at intervals not exceeding one thousand (1,000) feet or less than four hundred (400) feet. Blocks shall have sufficient depth to provide for two (2) tiers of lots of appropriate depth. Exceptions to this prescribed block depth shall be encouraged in blocks adjacent to major streets, railroads or waterways.

2.5 Curb and Gutter. Curb and gutter shall be considered part of city stormwater conveyance system. Curb and gutter shall be constructed in accordance with plans and specifications and shall be maintained and kept clean throughout construction so as not to allow sediment, trash, oil, or any other debris to enter into storm sewer system.

2.6 Pavement Design. Developer shall provide with plans submitted for approval, pavement design for proposed streets within development. Pavement type shall be indicated and shall include thicknesses of concrete, asphalt, and aggregate base. Plans shall provide soil compaction parameters. Materials shall be in conformance with applicable sections included in "City of Carthage Standard Specifications for Street Construction."

3. STREET WIDTHS

3.1 The right-of-way width required to be dedicated and the pavement width required to be constructed for streets, according to street classification, shall be:

TYPE OF STREET	MINIMUM FEET RIGHT-OF-WAY	PAVEMENT WIDTH (BACK TO BACK OF CURB)	
		MAXIMUM (FEET)	MINIMUM (FEET)
Freeway	Variable	96*	48*
Expressway	Variable	72*	48*
Arterial, urban	80-106	68	120
Arterial, rural	80-106	68	24*
Collectors	60		50
Local, nonresidential, central traffic zone	60		41
Local, nonresidential, all other	60		41
Local, residential	50		31
Cul-de-sacs, residential (stem portion)	50		31
Estate lanes	50		31
Marginal Access roads	30		20

*In addition to road pavement, two (2) paved, ten-foot shoulders are required.
Standard curb and gutter width 2.5 feet.

NOTE: Where it is impracticable to comply with these standards, a written approval to deviate therefrom must be obtained from the Public Works Director.

4. INTERSECTIONS

4.1 Streets shall intersect one another at as near a ninety-degree angle as possible. No intersection of streets at angles less than sixty (60) degrees shall be approved.

4.2 When streets intersect at a ninety-degree angle or when a street intersects with a cul-de-sac terminal bulb, the intersection right-of-way lines shall be rounded by a curve with a radius of not less than twenty (20) feet for residential streets and not less than (30) feet for nonresidential streets.

4.3 When streets intersect at an angle of less than ninety (90) degrees, the Public Works Director may require the intersecting right-of-way lines to be rounded by a curve with a radius greater than required for streets intersecting at a ninety-degree angle.

4.4 The intersection of more than two (2) streets at any one (1) point shall be avoided except where necessary to secure a proper street system.

4.5 Intersecting streets shall have center lines as nearly straight as possible. Streets with center line offsets at intersections shall be offset by less than five (5) feet or more than one hundred twenty-five (125) feet.

5. TERMINAL STREETS

5.1 Permanent terminal streets shall not be longer than seven hundred fifty (750) feet, measured from the center of any cul-de-sac to the right-of-way line of the nearest through street from which it derives.

5.2 Terminal streets shall also have a turnaround at the closed end with an outside roadway diameter of at least seventy-six (76) feet and right-of-way diameter of at least ninety-four (94) feet.

5.3 Residential alleys shall not be permitted in single-family residential areas.

5.4 Non-residential alleys shall be provided in commercial and industrial districts when off-street loading and parking are not otherwise provided.

5.4.1 The right-of-way width of an alley shall be twenty (20) feet.

5.4.2 When alleys intersect, the intersection right-of-way lines shall be rounded by a curve with a radius of five (5) feet in length.

6. TRAFFIC CONTROL

6.1 General. Materials, placement, maintenance, and removal of Traffic Control Devices shall be governed by Part 6 of the "Manual of Uniform Traffic Control Devices," published by the U.S. Department of Transportation of the Federal Highway Administration.

6.2 Maintenance of Access – Construction Sequence. The Contractor shall strictly adhere to the construction sequence outlined on the Construction Phasing Plans.

6.3 Placement of Devices – Approximate Quantities. In order to maintain safe work and travel in the construction zone, the Contractor shall provide and install signs, barriers, and lane channelization for vehicles as shown on the Traffic Control Plan.

7. QUALITY ASSURANCE

7.1 Developer/Contractor shall provide to City Engineer test reports from independent testing laboratory confirming subgrade, granular stone base, granular stone bedding, and pavement have been constructed in conformance with City of Carthage Standard Street Specifications. Quality

assurance tests shall be performed at a minimum in accordance with the schedule indicated below or as determined by the City Engineer or City Inspector. The City Engineer or City Inspector shall be notified at least 24 hours prior to a scheduled inspection or test. Costs for independent testing of streets shall be the responsibility of the developer. Trench backfill and pipe bedding under streets shall be tested and inspected prior to construction of streets. Curb & gutter and street, including crown, shall be checked for grade at intervals of 50 linear feet. Following construction, project engineer shall provide signed approval stating to City that streets have been constructed in accordance with approved plans and City Street Specifications.

	Compaction		Thickness	
	SY/Test	% Compaction	SY/Test	Max Lift (in)
Subgrade	1000	95% *	—	6
Granular Stone Base	1000	95%	1500	6
Asphalt Pavement	1000	95%	2500	—

* For Range B subgrade. See section 02230

1. GENERAL

1.1 The work of this section consists of the periodic removal of construction debris from the job site(s) and associated public streets, roads, easements, and right-of-way used during construction. In addition, the final detailed cleaning of the site prior to the Owner's acceptance of the project is included.

2. MATERIALS

None.

3. METHODS

3.1 General: The Contractor shall keep the construction site sufficiently clean so as to allow a safe and expeditious construction operation to be implemented. Periodically and upon completion of the work and before acceptance and final payment is made, the Contractor shall clean and remove from the road rights-of-way, easements, public and private property, all surplus, discarded materials, perishable matter, rubbish and temporary structures. He shall restore in an acceptable manner all property, both public and private, which may have been damaged on account of the prosecution of the work, and shall leave the roadway, easements, public and private property neat and presentable.

3.2 Open-burning: During each construction project phase, efforts shall be taken to prohibit the open burning of refuse in accordance with laws and regulations of the applicable municipal and state agencies.

3.3 Dust Control: Construction operations may require control measures to prevent the creation of excessive dust, which will be the responsibility of the Contractor.

3.4 Water Pollution Control: The Contractor shall exercise caution to guard against the degradation of the waters of the State of Missouri due to construction related pollutants (silt, debris, and petroleum products), and shall prevent the discharge of sewage involved with this contract into the waters of the State of Missouri.

CLEARING AND GRUBBING.....02102

1. GENERAL

1.1 Description: The work on this section consists of furnishing all labor, materials, equipment, and tools necessary for performing all operations for the proper execution of all clearing, grubbing, removing, and disposing of vegetation within the limits of the right-of-way and easement, except such vegetation as is designated to remain or as shown on plans and as necessary to complete this or other sections.

2. MATERIALS

None.

3. EXECUTION

3.1 Clearing: Clearing shall consist of filling, trimming, or cutting of trees into sections and the satisfactory disposal of the trees and other vegetation, including downed timber, snags, brush, and rubbish within the construction areas. Trees, stumps, roots, brush, and other vegetation in the areas to be cleared shall be cut below the original ground surface.

3.2 Grubbing: Grubbing shall consist of the removal and disposal of stumps, roots larger than two inches in diameter and matted roots from any designated areas to be grubbed. This material, together with logs and/or other organic debris, shall be excavated and removed to a depth of not less than 12 inches below the original surface of the ground or 12 inches below proposed construction limits, whichever is lower. Depressions created by grubbing operations shall be filled with suitable material and compacted.

3.3 Areas to be Cleared and Grubbed: The area within the width and length of the project limits which requires filling and excavation as shown on the plans shall be cleared and grubbed.

3.4 Disposal of Material: All trees, vegetation, or other cleared and grubbed material shall be removed from the project site and disposed of in accordance with laws applicable at the disposal site. No burning will be permitted on the easements.

4. MEASUREMENT AND PAYMENT

4.1 Clearing and grubbing of all areas within the project limits and as shown on the plans shall be measured and paid for as stated in the bid schedule.

1. GENERAL

1.1 This work shall consist of the removal and disposal of all existing improvements, except those designated or permitted to be left in place or to be removed under other items of work, from the right-of-way and within the limits of the project.

1.2 Removal of existing improvements shall include removing all buildings, drainage structures, pavements, surfacing and base courses of all types, curb, curb and gutter, sidewalks and house walks, steps, retaining walls, foundation walls, columns, footings, floors and any other types of building appurtenances, cisterns, catch basins, manholes, drainage and sewer pipes, water and gas main pipes, other objects or structures including scattered or piled bricks, stones, broken masonry, rubbish, debris, etc. from building demolition work, and other existing improvements. This item shall also include the salvaging of materials as designated in the contract, and the backfilling of the resulting trenches, holes, and pits, and any grading work required to shape, smooth, and finish the disturbed areas.

3. EXECUTION

3.1 All buildings, disused structures, old pavements, abandoned sewers or pipe lines, or other obstructions to the construction of the roadway or within the limits of the right-of-way and not designated or permitted to remain shall be removed or disposed of by the Contractor as required. Existing structures used for handling temporary traffic shall not be removed until the replacement structures are open to traffic. The Contractor may make use of existing structures or portions of them during construction, but no material designated for use elsewhere shall be removed from the project, cut, bent, broken, or otherwise damaged.

3.2 Material designated in the contract to be salvaged from existing structures shall be removed without damage in sections which may be readily handled or transported, and shall be piled neatly at an accessible point. Material not designated for salvage will be considered the property of the Contractor unless owned and claimed by any political subdivision or utility company. Salvaged materials becoming the property of the Contractor shall not be stored upon the right-of-way, nor shall any portion of the right-of-way be used by the Contractor as a sales yard. All discarded materials or debris shall be disposed of at locations furnished by the Contractor, or at locations on the right-of-way approved by the Engineer.

3.3 In removing pavement, curb, curb and gutter, gutters, sidewalk, and other similar improvements, and where a portion of such improvements are to be left in place, they shall be removed to an existing joint or to a joint sawed to a minimum depth of one inch with a true line and vertical face. Sufficient removal shall be made to provide for proper grades and connections in the new work regardless of any limits which may be indicated on the plans.

3.4 Removal of concrete pavement or base course and concrete sidewalk may consist either of breaking up and disposing of the broken concrete in embankments or in disposal areas furnished at the Contractor's expense, or of breaking the slab into pieces not exceeding 4 square feet where new embankment over 24 inches high is to be placed over the slab. Existing improvements not removed in their entirety shall be removed to a minimum depth of 12 inches below the finished grading section or natural ground.

3.5 All sewers and drainage pipes which have been or are to be abandoned shall be permanently sealed at the ends with bulkheads constructed of Class B Concrete, concrete of a commercial mixture or brick masonry, having a minimum thickness of 8 inches. The use of salvaged brick will be permitted for constructing bulkheads provided the brick are clean and sound. No direct payment will be made for blocking abandoned sewers, drainage pipes, or floor drains.

3.6 All trenches, holes, and pits resulting from the removal of existing improvements shall be filled with earth. The material shall be placed in the same manner and compacted to approximately the same density as that required in adjoining areas.

3.7 Removing and disposing of abandoned fences will be considered as included in final cleaning up of the right-of-way and no direct payment will be made for such work.

4. MEASUREMENT AND PAYMENT

4.1 Measurement: Removal of existing improvements provided herein will be measured as a lump sum item for payment. This shall include the removal of all items, whether in view or hidden underneath the surface of the ground, regardless of whether shown on the plans or encountered during construction.

4.2 Payment: Removal of existing improvements will be paid for at a lump sum price and will include all incidentals.

1. GENERAL

1.1 Perform all excavating, filling, rough grading, finish grading, and trenching as shown on the drawings and to provide proper drainage, as follows:

1.1.1 Perform general excavation for structures to grades, lines, and levels as indicated for miscellaneous drainage structures.

1,1,2 Perform general exterior grading, cutting, and filling required to transform existing grades shown on drawings.

1.1.3 Perform filling of embankment and backfilling for all work as required to conform with the lines, grades, thicknesses, and typical cross shown on plans. Material used for fill and backfill shall be taken from the existing right-of-ways, or from a designated borrow area.

1.1.4 Cut ditches to divert water around streets, parking area and drives as shown on drawings.

1.1.5 Perform fine grading using four (4) inches topsoil free of rocks. Set all grade stakes, and place topsoil after rough grading has been approved by the Engineer. All finish grading shall be hand raked and shall be left ready for the sowing of grass seed. Limits of fine grading shall be within the project limits.

1.1.6 Water shall be diverted or pumped out of the excavations until completion of the work for which the excavations were made.

1.1.7 All excess material shall be spread on other parts of the property or disposed of by the Contractor when so directed.

1.1.8 All material excavated shall be considered as unclassified excavation which shall consist of all material of whatever character encountered in the work, including soil, solid rock, fragmented rock, water, or other.

1.19 All excess suitable excavation shall be placed and compacted at the waste fill area designated on the plans. The waste area shall be stripped of topsoil (min. depth-18 inches) prior to placing excavation. The excavation or fill material shall be compacted as designated by the Engineer. The area shall slope from north to south. Excavated topsoil should be stockpiled at a location designated by the Engineer.

2. ROCK EXCAVATION

2.1 Any solid or fragmented rock over six (6) inches in diameter encountered during excavation of the project site or borrow shall be removed and disposed of by the Contractor unless designated by the Engineer. No direct compensation will be included for rock excavation.

3. EXCAVATION

3.1 Crushed Stone and Paved Areas:

3.1.1 In all areas where concrete curb and gutter or paving is to be installed, the finished subgrade shall be excavated to the bottom of the granular stone base to allow for construction of curb and gutter, aggregate base, and paving. In all areas which are to receive curb and gutter and/or asphaltic paving, the subgrade shall be scarified and compacted in accordance with Section 02210 - SUBGRADE COMPACTION and Section 02230 - SOIL COMPACTION CONTROL.

4. EMBANKMENT

4.1 Do all cutting, filling, compacting of fills, and rough grading required to bring the entire project area to subgrades for all surfaced and planted areas. Remove topsoil to its entire depth from the areas within line five (5) feet outside areas to be occupied by roads, walks, and other surfacing. Pile topsoil in approved locations where it will not interfere with building or utility operations. Areas to be stripped as designated by the plans shall first be scraped clean, cleared, and grubbed of all brush, weeds, grass, and roots. Topsoil shall be reasonably free from subsoil, debris and stones larger than two (2) inches diameter. All finish grading in areas designated to be fine graded shall be done with satisfactory topsoil and in such manner as will permit the sowing of grass seed with no further work necessary. All rough grading of areas to be fine graded shall be done to a level of four (4) inches below elevations shown to allow placement of topsoil. The inslopes shall not require topsoil, but shall require seeding and mulching.

4.2 Rough grading of areas beyond limits of fine grading shall be done with machine and shall be as smooth and free of rocks as can be obtained under machine conditions. Grades shall be accurately cut to elevations shown on elevations and cross sections.

4.3 All ditches, swales and gutters shall be finished to drain readily.

4.4 Material for fill shall be free of roots, wood, or other organic material and shall be taken from the project site and borrow area. Remove all debris subject to termite attach, rot, or corrosion, and all other deleterious materials from areas to be filled. Prior to placing fill material, the surface of the ground shall be scarified to a depth of twelve (12) inches and the moisture content of the loosened material shall be such that it will readily bond with the first layer of fill material. Place fill in layers not exceeding six (6) inches or eight (8) inches loose material.

4.5 Compact each layer of fill by rolling or tamping to ninety-five (95) percent of maximum density at optimum moisture content. The degree of compaction shall be determined and controlled in accordance with the current AASHTO "Standard Method of Test for the Compaction and Density of Soil." Compaction shall be accomplished by the use of power rollers, machine tampers, or other mechanical equipment approved by the Engineer. If necessary, soil shall be moistened, or allowed to dry to the correct moisture content before compaction. Do not deposit any fill on a subgrade that is muddy, frozen, or that contains frost.

5. TESTS

5.1 The Contractor shall provide, at his cost, a compaction test for each 1000 square feet of fill for each 6-inch lift and/or as required by Section 02230 - SOIL COMPACTION CONTROL. Where tests indicate that fill does not conform to the compaction density specified, the fill shall be removed and replaced with conforming material without additional cost to the Owner. The name of the testing company shall be submitted to the Engineer for approval and copies of each test report shall be furnished to the Engineer.

6. MEASUREMENT AND PAYMENT

6.1 Earthwork shall be measured and paid for at the unit price as shown in the Bid Schedule. The quantities as shown on the cross sections from the bottom of the proposed aggregate base to the existing ground elevation is used in determining the required quantities of excavation of earthwork and shall be used as the final quantity. All earthwork which required filling and shaping shoulders shall be considered incidental to construction.

6.2 Soils testing, hauling, materials, equipment, and supervision shall not be measured or paid for separately, but shall be considered an obligation incidental to the contract.

1. GENERAL

1.1 Description: This work shall consist of compacting the earth subgrade on roadbed of a previously graded or excavated roadway. This work shall be performed prior to the placement of granular stone base on widened roadways or areas which require the removal of the existing roadway.

1.2 The contractor shall perform this work on the subgrade at all locations beneath the aggregate stone base.

2. CONSTRUCTION REQUIREMENTS

2.1 The subgrade for the full width of the roadbed shall be scarified to a depth of at least 6 inches, and the scarified material brought to a uniform moisture content either by drying or by adding water and manipulating with suitable equipment. At the Contractor's option, the upper 6 inches of soil may be removed and replaced with satisfactory material, or removed and manipulated with suitable equipment before replacing. The material shall be compacted to produce a subgrade having a density not less than the density required and within the moisture contents specified under Section 02230 by the use of approved equipment producing satisfactory results.

2.2 If the required subgrade density cannot be obtained by moisture control and compaction of the upper 6 inches, the unsuitable material shall be excavated and replaced with satisfactory fill material compacted in layers not to exceed 6 inches. Each 6-inch layer shall be processed, wetted, or dried as necessary, and compacted to the required density. No extra compensation will be made for removal of unsuitable material and the work shall be considered incidental to the contract.

3. MEASUREMENT AND PAYMENT

3.1 Subgrade compaction shall not be measured or paid for separately, but shall be included and considered incidental to the placement of granular stone base.

1. GENERAL

1.1 Description: The work of this section consists of excavation for trenches relating to the construction of underground piping. There will be no distinction made in any definition or classification of excavation covered by this section between wet or dry materials below the surface of the earth. Trench excavation shall be considered as unclassified, which shall consist of all materials of whatever character encountered in the work, including soil, solid rock, fragmented rock, water, or other. Work under this section shall also include:

1.1.1 All sheeting, shoring, bracing, protection of adjacent property, preparation of all subgrades, storage of excavated materials, backfilling, tamping, grading, and surfacing.

1.1.2 Diversion of surface water, and all pumping, draining, or other means of dewatering excavations.

1.1.3 All subsequent handling and disposal of excavated material, together with the preparation of all trench subgrade.

1.2 Protection of Adjacent Property: The Contractor shall protect all excavations and trenches from settlement or displacement by approved means of bracing and shoring. All existing underground utilities and structures as well as all surface improvements and structures shall be protected and their functional purpose preserved.

2. CLASSIFICATION OF EXCAVATION

2.1 All excavation shall be considered as unclassified.

3. TRENCHING

3.1 Lines and Grades: The Contractor shall furnish and set all stakes for the lines and grades as shown on the drawings including all grade boards, uprights, and accessory materials required. Grade boards shall be installed across the trench at intervals not to exceed 25 feet. The Contractor shall be held responsible for verification of lines and grades as established and shown on the drawings. The Owner may check the line and grade at any given point before backfilling has been started, and if there is a variation of more than two-hundredths (0.02) of a foot from the true grade, the same shall be raised or lowered as required.

3.1.1 In the event a laser beam is used to set line and grade for the pipe laying operation, grade stakes shall be set at each manhole and at 25 feet, 50 feet, 100 feet, and then 100-foot increments thereafter, upgrade of the manhole. The laser must be checked at the beginning of each day and at each grade stake to insure the proper line and grade of the pipe.

3.2 Excavation: All excavation for trenches shall be made with a sufficient working space to permit the placement, inspection, and completion of all work contemplated in the contract. Excavated material that is unsuitable for backfill, and all boulders exposed by grading shall be removed from the work area. Trenches shall be excavated in accordance with the drawings for trench width relative to trench depths.

3.2.1 Trenches shall be excavated to six inches below the bottom of the pipe when set to established flow lines. Should the trench be excavated more than six inches below the bottom of the pipe, the Contractor shall use only granular stone bedding material to establish flow line grade.

3.2.2 Trench excavation shall, in all cases, be made continuous from the ground surface to the established trench depth. Materials excavated shall be stockpiled at the sides of the trench and within established area limits so as to minimize inconvenience to the public, and damage to vegetation and structures in the area.

3.2.3 Trenching, shoring, bracing, and shields shall be placed by the Contractor whenever necessary for the proper preservation of any excavation, embankment, or structure. Where the ground is of such a character or other conditions are such as to render it necessary, the sheeting shall be closely driven and to such depth below the lowest point of the final excavation as may be directed. The Contractor shall be held responsible for the sufficiency of all sheeting and bracing used, and for any and all persons injured, or property damaged as the result of improper quality, strength, placement, maintenance, or removal of the same. No extra compensation will be made for sheeting and bracing, whether left in place or not. The Contractor shall, at his own expense, shore up, protect, and insure from injury all building, retaining walls, piers, and footing, storm sewers, sanitary sewers, gas lines, water lines, fences, curbs, trees, or other property liable to be injured during the process of the work, and he will be held responsible for all damage which may occur by reason of prosecution of the work. Sheeting, shoring, and bracing shall be provided, installed, and maintained to protect the excavation, insure the safety of workmen, and as required by applicable federal, state, and local laws, rules, and regulations.

3.2.4 Trench width from six inches below the bottom of the pipe to six inches above the pipe bell shall be held to 1.4 times the outside diameter of the pipe plus twelve inches. Trench width above these levels may be wider to accommodate shoring, bracing, and shields, but shall be kept within practical limits. Contractor shall not receive additional payment for extra trench width.

3.3 Removal of Water: The Contractor shall furnish and operate sufficient pumps and appliances, and shall provide all material, labor, etc. required to prevent interference with any work by water, ice, or snow. Damage of any kind resulting from insufficient pumping facilities or similar lack of proper conduct of the work shall be made good by the Contractor at his own expense. No structure and pipes shall be placed in water and water shall not be allowed to run into or cover any concrete work or pipe, or into or through any pipe, unless by special permission given by the Owner in writing.

3.4 Record Drawings: Even though all excavation shall be considered unclassified for pay purposes, the Contractor shall clearly indicated on the Record Drawings (which he shall submit to the Owner) the elevations and extent of all solid rock encountered during construction of the project.

4. BACKFILLING AND COMPACTING

4.1 Material used for backfilling of trenches shall be free from perishable matter and from other material liable to become unstable when saturated with water after having been compacted. No frozen material shall be used in backfill. No large stones or organic matter shall be placed within two feet of the top of the sewer pipe. Care shall be taken to prevent damage to the pipe and structures. Special precautions shall be taken in backfilling over pipes. No backfill shall be placed over any portion of pipes and/or joints not inspected by the Owner. The granular stone bedding material shall be brought to a depth of at least six inches over the top of the pipe bell, with this material carefully deposited in uniform layers not exceeding six inches in depth, and each layer carefully and solidly tamped with mechanical tampers in such a manner as to avoid damage to pipe or disturbing completed work. Unless noted otherwise on the drawings, backfilling for the remainder of the trench shall be previously excavated gravel, sand, or earth, and shall contain no stone over three inches in its largest dimensions. Stones smaller than that size may be used in proportion not exceeding one part of stone and three parts of earth in any place. This backfilling shall be deposited and spread in layers and solidly tamped. As the trenches are backfilled, the Contractor shall remove all surplus material and regrade the surface leaving it in good order. The trenches shall be filled to the ground surface elevation which previously existed, unless shown otherwise on the drawings.

4.1.1 The Contractor may be required to settle certain backfill material with water, in addition to other backfilling procedures. The water will be furnished by the Contractor without cost to the Owner. Methods and procedures in using the water shall be approved by the Owner prior to carrying out the operation.

4.1.2 Whenever, in the opinion of the Owner, the excavated material is not suitable for backfilling the trench, or there is a deficiency of material, the Contractor shall, as his own expense, provide suitable material.

4.1.3 All excess excavation materials shall be cleaned up by the Contractor as directed. All backfilled trenches shall be maintained by the Contractor for a period of one year after Final Acceptance of the work by the Owner.

4.2 Roadway Crossings: At all open-cut roadway crossings, and as noted elsewhere, the trench shall be backfilled to grade with granular stone meeting the requirements of Section 02222 - GRANULAR STONE BEDDING AND BACKFILL. For roadway surface replacement, see Section 02575 - ROADWAY SURFACE AND SIDEWALK REPLACEMENT.

4.3 Private Drives, Field Entrances, etc.: At all open-cut crossings of private drives, field entrances, and the like, the trench backfill shall be deposited and spread in layers and solidly tamped to Range "B" compaction requirements set forth in Section 02250 - COMPACTION CONTROL AND TESTING. Private drives, etc. shall be backfilled "immediately" upon completion of the pipe laying across the drive. The driving surface shall be restored to its original condition immediately following proper compaction of the backfill.

GRANULAR STONE BEDDING AND BACKFILL 02222

1. GENERAL

1.1 Description: The work in this section shall consist of furnishing, hauling, placing, and compacting granular stone for bedding underground utility piping, and for granular stone backfill at street crossings and other locations shown on the drawings.

2. MATERIALS

2.1 Pipe Bedding: Aggregate shall be well-graded crushed stone conforming to ASTM Designation C33, Gradation 67, 1-inch to No. 8 as follows. Sand or chat will not be allowed.

Laboratory Sieve	Amounts Finer than Weight %
1"	100
3/4"	90 - 100
3/8"	20 - 55
No. 4	0 - 10
No. 8	0 - 5

2.2 Pipe Backfill: When granular stone backfill is required, the aggregate shall be identical to the pipe bedding material specified in paragraph 2.1.

3. EXECUTION

3.1 Pipe Bedding: Granular stone shall be placed in the trench and shaped so as to provide uniform support for the bottom quadrant of the pipe barrel. The bedding shall be not less than six (6) inches in thickness. Following the placement of the pipe, the trench shall be filled with granular stone bedding material to a minimum compacted depth of six (6) inches above the pipe bell. Bedding installation in trench shall be to the widths and depths as shown on the drawings.

3.2 Pipe Backfill: When granular stone backfill is required, it shall be of the specified graduation and shall be placed in the trench in maximum 24-inch thick layers and compacted to 80% of maximum density.

1. GENERAL

1.1 Description: The work of this section consists of furnishing all equipment, labor, materials, and incidentals to compact the various fill areas. Also, the Contractor shall provide the necessary on-site testing facilities and equipment.

2. MATERIALS

None.

3. EXECUTION

3.1 Compaction Requirements: Compaction requirements for soils as controlled by methods of testing described herein are as follows:

Range A - In place compacted density of soil shall be equal to or greater than one hundred (100) percent of the maximum density at optimum moisture content.

Range B - In place compacted density shall be equal to or greater than ninety-five (95) percent of the maximum density at optimum moisture control.

Range C - In place compacted density shall be equal to or greater than eighty (80) percent of the maximum density at optimum moisture.

Density range for compaction shall be as stated on the drawings or as specified herein. Compaction requirements for granular stone or sand, as controlled by methods of testing described herein shall be to a density of not less than ninety-five (95) percent of the referenced density.

3.1.1 Range B Compaction shall be used for all compacted fill.

3.2 Compaction Operations:

3.2.1 Trenches & Adjacent to Structures - Compaction shall be achieved using manually operated mechanical tampers or towed and self-propelled drum and vibrator tampers.

3.2.2 Roadways & Fills: Compaction shall be achieved using rollers, vibrators, compactors, or mechanical tampers.

3.2.3 Variances: The use of water jetting or similar techniques of compaction is prohibited as the sole means for compaction.

3.3 Moisture Content & Control:

3.3.1 Content: The moisture content requirements as determined under the methods of testing described herein are as follows:

Range A Compaction: The moisture content of the soil at the time of compaction shall be uniform and shall be not higher than five (5) percentage points above the optimum nor lower than the optimum of the soil involved.

Range B Compaction: The moisture content of the soil at the time of compaction shall be uniform and shall not be lower than three (3) percentage points below the optimum moisture content of the soil involved.

Range C Compaction: The moisture content of the soil at the time of compaction shall not be lower than five (5) percentage points below the optimum moisture content of the soil involved.

Compaction of Granular Stone or Sand: The moisture content shall be not less than ten (10) percentage points below the optimum content at the time of compaction.

3.3.2 Control:

3.3.2.1 Water Application: The moisture content of the soil at the time of compaction shall be within the moisture range designated. When the natural moisture content of the embankment soil does not fall within the required moisture range, water shall be added or the material shall be aerated, whichever is needed to adjust the soil to the proper moisture content. Water may be transported or distributed from calibrated tank trucks or the water may be added to the soil in the borrow and cut areas before hauling, as long as the moisture content of the soil at the time of compaction is uniform and within the designated moisture range.

3.3.2.2 Testing: No water shall be added without the consent of the Resident Project Representative and without providing him adequate opportunity to measure the quantities used. The amount of water to be added shall be only that amount that will, as determined by the field moisture tests, provide a moisture content in the soil to be within the required range plus a reasonable amount to compensate for evaporation and other unavoidable losses. Satisfactory methods and sufficient equipment shall be used for the furnishing and handling of the water so there will be no undue loss due to evaporation. If water is added to cut areas or borrow pits, the surfaces of the areas or pits shall be maintained in such a manner that will prevent undue loss of moisture.

3.3.2.3 Visual Control: From other than the results of the moisture content test, the moisture content of the soil being compacted shall be considered as being too high to ensure compaction when after repeated rollings with the sheepsfoot roller, the roller continues to pick up excessive amounts of soil and refuses to "build up" so that the tamping feet eventually ride the compacted surface.

3.4 Compacting Equipment:

3.4.1 Sheepsfoot Rollers: Sheepsfoot rollers shall conform to the following requirements: Tamping or sheepsfoot rollers shall consist of metal rollers, drums, or shells, surmounted by metal studs with tamping feet projecting not less than six and one-half (6 ½) inches from the surface of the rollers, drum or shell. Tamping feet shall be spaced not less than six (6) inches, nor more than twelve (12) inches measured diagonally center to center, and the cross-section area of each tamper foot, measured perpendicularly to the axis of the stud, shall not be less than four (4) nor more than twelve (12) square inches. The weight of tamping rollers shall be such that, when fully loaded, the load on each tamper foot shall not be less than two hundred (200) pounds per square inch of cross-sectional area. The load per tamper foot will be determined by dividing the total weight of the roller (loaded) by the number of tamper feet in one (1) row parallel to the axis of the roller.

3.4.2 Pull-Type Steel Rollers: Pull-type steel rollers shall not have less than forty-eight(48) inches effective width of roll and shall be designed and constructed so that the weight per lineal inch of roll can be varied from two hundred (200) to at least three hundred (300) pounds.

3.4.3 Trench Rollers, Self-Propelling: The trench roller shall be an approved type and shall not weigh less than three hundred (300) pounds per inch of width.

3.4.4 Manually Operated Compactors: Equipment shall be in good mechanical condition and shall be capable of transmitting forceful vibrations or impacts to the various materials placed in construction.

4. SOIL TESTING

4.1 Testing Methods: Density tests, as prescribed in these specifications, will be made on the soil to be used in the construction of the project to determine a reference density, an optimum moisture content, and the moisture range applicable to the soil required to attain specified compaction. The field density and actual moisture content of the compacted material shall also be determined as prescribed previously herein.

4.1.1 Reference Density: The density as determined by the specified compaction test shall be the density to which the field density is referred for comparison or percentage for each type of soil used in the work.

4.1.2 Optimum: The optimum shall be the moisture content corresponding to the reference density on the specified compaction test curve.

4.1.3 Moisture Range: The moisture range shall be the limits of moisture content of the soil with the optimum as a reference.

4.1.4 Field Density: The field density shall be the density of the compacted material determined by the field density test. If an in-field density test shows results below the minimum requirements, the lift or area in question shall be retested after additional compactive efforts are performed. If the original in-field density test results are more than two percentage points below minimum requirements, additional tests are required, and the area in question shall be scarified and recompacted, if so designated by the Engineer. Additional testing and scarification shall be performed by the Contractor without any additional payment and shall be considered incidental to the completion of the project.

4.1.5 Moisture Content: The moisture content shall be the actual moisture content of the soil in the compacted embankment or fill at the time of compaction.

4.2 Scope of Tests:

4.2.1 Borrow Areas: All areas selected to supply backfill and area fill materials requiring a specified density shall have moisture-density relationships determined by ASTM Designation D-698, when the soil is initially excavated. In place density of compacted soil shall be tested in accordance with ASTM Designation D2167-63T or D2922, latest revision, to determine compliance with specifications. Specific testing locations will be determined by the Engineer.

4.2.2 Granular Stone & Sand: Granular stone and sand shall have moisture-density relationships determined by ASTM Designation D2049. In place density shall be determined by ASTM Designation D2167, ASTM D698, or D2922.

4.2.3 Compacted Soil Sub-Base Supporting Concrete, Steel, or Masonry Structures: Density shall be determined by a minimum of three samples and/or tests per structure, or two samples and/or tests per 1000 S.F. of area, for each two lifts of fill by ASTM Test Designation D2167-63T, or D2922.

4.2.4 Compacted Soil Sub-Base Supporting Rigid & Flexible Pavements & Crushed Stone Surfacing: Density shall be determined by a minimum of three samples and/or tests, or two samples and tests per 500 S.Y. of area, for each 6 inches of fill.

4.2.5 Compacted Granular Stone or Sand Supporting Concrete, Steel, Masonry Structures, Rigid And Flexible Pavements: Density shall be determined by a minimum of three samples and/or tests, or one sample and/or test per 100 S.Y. of area, whichever is greater.

5. MEASUREMENT AND PAYMENT

5.1 Measurement: Compaction will not be measured separately for payment and will be considered incidental with the compacted fill, backfill, grading, and hauling requirements.

5.2 Payment: Compaction will not be paid for separately and is considered to be included in the price for excavation, compacted fill, and backfill. Additional testing, if required by the Engineer for further verification of the embankment or fill compaction, will be considered incidental to the completion of the project and no additional payment will be made.

1. GENERAL

1.1 The work shall consist of furnishing and placing one or more courses of aggregate on a prepared subgrade in accordance with these specifications and in conformity with the lines, grades, thicknesses, and typical cross sections shown on the plans.

2. MATERIALS

2.1 Granular Stone Base (MoDOT Type 1): Crushed stone shall conform to material specified and produced by an approved source. Aggregate shall be mechanically crushed limestone or dolomite. It shall not contain more than 15 percent deleterious rock and shale. Sand may be added only for the purpose of reducing the plasticity index of the fraction passing the No. 40 sieve in the finished product. Any sand, silt, and clay, and any deleterious rock and shall be uniformly distributed throughout the mass. The aggregates shall conform to the following gradation requirements:

Percentage by Weight Passing Each Sieve:

1 Inch Sieve ----------100%
½ Inch Sieve ----------60-90%
No. 4 ----------35-60%
No. 40 ----------10-35%

Plasticity Index of the fraction passing the No. 40 sieve shall not exceed 6.

Material shall be delivered with sufficient moisture content to provide specified densities when compacted.

2.2 Granular Stone Base (MoDOT Type 5): Material shall conform with MoDOT 2004 Specifications, Section 1007, paragraph 1007.3.

3. METHODS

3.1 Subgrade: All work on that portion of the subgrade on which the base is to be constructed shall be completed in accordance with the requirements of these specifications prior to the placing of any base material on that portion. Aggregate base shall not be placed on a frozen subgrade.

3.2 Placing: The maximum compacted thickness of any one layer shall not exceed six (6) inches. When the specified compacted depth of the base course exceeds six (6) inches, the base shall be constructed in two or more layers of approximately equal thickness. The compacted depth of a single layer of the base course may be increased to eight (8) inches for shoulders and lightly traveled areas. After preliminary compaction has been secured, finish compaction shall be carried to completion by means of self-propelled steel-wheeled rollers weighing not less than ten (10) tons. Shaping and compacting shall be carried on until a true, even, uniform base course of proper grade, cross section and density is obtained. Proper moisture content shall be maintained by wetting the surface or allowing it to dry as required during shaping and compacting operations. The use of excess water, resulting in run-off or in the formation of a slurry on the surface shall be avoided. The stone base shall be compacted to not less than ninety-five (95) percent of the maximum density at optimum moisture content.

3.3 Testing: The compacted base shall be tested for in place density by ASTM Method 2950, latest revision, at the rate of one (1) determination for each 1000 square yards of base surface, or as required by the Engineer.

3.4 Tolerance: The compacted base shall be brought to within a tolerance of ½" or less below design grade.

3.4.1 The compacted aggregate base thickness shall not be deficient in excess of ½ inch from the plan thickness. Thickness measurement shall be taken and determined for each 1500 square yards of base surface or as designated by the Engineer.

4. MEASUREMENT AND PAYMENT

4.1 Measurement: Granular stone base shall be measured per square yard of compacted stone in place. Separate measurement will be made for differing thickness of granular stone base areas. Final measurement of the completed granular stone base will not be made except for authorized changes during construction as approved by the Engineer.

4.2 Payment: Granular stone base shall be paid for at the unit price per square yard stated in the Bid Schedule and shall constitute full compensation to the Contractor for all labor, material, equipment, manipulation, compaction, testing, and incidentals necessary to provide the granular stone base.

COMPACTION CONTROL AND TESTING.....02250

1. GENERAL

1.1 Description: The work of this section shall consist of furnishing all equipment, labor, materials, and incidentals to compact the various backfills. The Contractor shall be responsible for providing all necessary on-site testing facilities and equipment.

2. EXECUTION

2.1 Maximum Density: The maximum density of the fill material shall be determined according to ASTM D698, "Standard Proctor Method". If more than one type of fill material is used, the maximum density for each type shall be determined. Determination of the maximum densities shall be the Contractor's responsibility. The Owner shall be provided with one copy of each maximum density test result, which shall include the maximum density and the optimum moisture content.

2.2 Compaction Operations: See Section 02221 - TRENCHING, BACKFILLING, AND COMPACTING.

2.3 Compaction Requirements: Compaction requirements for soils as controlled by methods of testing described herein shall be as follows:

Range A - In-place compacted density of soil shall be equal to or greater than one hundred (100) percent of maximum density at optimum moisture content.

Range B - In-place compacted density shall be equal to or greater than ninety (90) percent of the maximum density at optimum moisture content.

Range C - In-place compacted density shall be equal to or greater than eighty (80) percent of the maximum density at optimum moisture content.

Density range shall be as stated on the drawings. Compaction requirements for granular stone or sand, as controlled by methods of testing described herein, shall be to a density of not less than eighty (80) percent of maximum density.

2.4 Moisture Content Requirements: The moisture content requirements as determined under the methods of testing described herein shall be as follows:

Range A Compaction - The moisture content of the soil at the time of compaction shall be uniform and shall be not higher than five (5) percentage points above the optimum nor lower than the optimum of the soil involved.

Range B Compaction - The moisture content of the soil at the time of compaction shall be uniform and shall not be lower than three (3) percentage points below the optimum moisture content of the soil involved.

Range C Compaction - The moisture content of the soil at the time of compaction shall not be lower than five (5) percentage points below the optimum moisture content of the soil involved.

Compaction of Granular Stone or Sand - The moisture content shall be not less than ten (10) percentage points below the optimum content at the time of compaction.

2.5 Moisture Content Control:

2.5.1 Water Application: The moisture content of the soil at the time of compaction shall be within the moisture range designated. When the natural moisture content of the embankment soil does not fall within the required moisture range, water shall be added or the material shall be aerated, whichever is needed to adjust the soil to the proper moisture content. Water may be transported or distributed from calibrated tank trucks or the water may be added to the soil in the borrow and cut areas before hauling, as long as the moisture content of the soil at the time of compaction is uniform and within the designated moisture range.

2.5.2 Visual Control: From other than the results of the moisture content test, the moisture content of the soil being compacted shall be considered as being too high to insure compaction when, after repeated rollings with the sheepsfoot roller, the roller continues to pick up excessive amounts of soil and refuses to "build up" so that the tamping feet eventually ride on the compacted surface.

3. SOIL TESTING

3.1 Scope of Tests:

3.1.1 Borrow Areas: All areas selected to supply backfill and area fill materials requiring a specified compaction shall have moisture-density relationships determined by ASTM D698, latest revision, when the soil is initially excavated. In place density of compacted soil shall be tested in accordance with ASTM D2167, latest revision, to determine compliance with specifications. Specific testing locations will be determined by the Owner.

3.1.2 Granular Stone and Sand: Granular stone and sand shall have moisture-density relationships determined by ASTM D2049, latest revision. In place density shall be determined by ASTM D2167 or ASTM D1556, latest revision.

3.1.3 Compacted Soil Sub-Base Supporting Concrete, Steel, or Masonry Structures: The number of density tests shall be a minimum of three per structure, or two per 100 ft^2 of area for each two lifts of fill. In place density shall be as determined by ASTM D2167, latest revision.

3.1.4 Compacted Soil Sub-Base Supporting Rigid and Flexible Pavements and Crushed Stone Surfacing: The number of density tests shall be a minimum of three, or two per 300 S.Y. of area and for each 12 inches of fill, whichever is greatest.

3.1.5 Compacted Granular Stone or Sand Supporting Concrete, Steel, Masonry Structures, Rigid and Flexible Pavements: The number of density tests shall be a minimum of three per structure, or two per 300 S.Y. of area.

3.1.6 Compacted Trench Backfill over Granular Base: The Owner shall reserve the right to conduct density testing at a rate of one test per 100 L.F. of trench for each two lifts of fill. Density tests shall be performed as specified by ASTM D2167, latest revision. The costs of the initial density testing shall be borne by the Owner. Any retesting which is required as a result of a failure of the compacted backfill to meet the specified compaction requirements shall be paid for by the Contractor. Any area which fails to meet the specified compaction requirements shall be recompacted and retested until it meets the specified requirements.

1. GENERAL

1.1 Description: The work of this section consists of bringing to finish grade all areas on the site and furnishing all labor, materials, tools, and equipment necessary to complete this section.

2. EXECUTION

2.1 The Contractor shall grade the earth as indicated on the drawings.

2.2 In those areas noted on the drawings to receive seeding and mulching, the top six inches of all excavated areas shall consist of topsoil. Topsoil shall not be placed until the area has been shaped, trimmed, and smoothed, and, if the existing surface has become hardened or crusted, it shall be disked or raked so as to provide a bond with the layer of topsoil. The surface of the topsoil shall be free from lumps, clods, rocks, and shall conform to the lines and grades shown on the drawings.

2.3 Areas within the construction limits, regardless of whether or not they are to be seeded and mulched, shall be graded smooth and left with a neat and sightly appearance. The final grade around all structures shall be pitched to drain water away from the structures, and toward the roadside ditches, and natural drainageway. The finished grade shall be free of any and all projections which could interfere with mowing of the site.

1. GENERAL

1.1 Description: The work of this section consists of furnishing all labor, materials, tools, and incidentals necessary to restore the surface of all areas affected by construction, including landscaping as required herein, replacement of fences, stone-lined ditches, walls and embankments, and restoration of miscellaneous structures (mailboxes, street signs, etc.).

1.1.1 Type A Surface Restoration: Regardless of the site's previous condition, restoration consists of furnishing and placing topsoil (which may need to be hauled in), liming, seeding, mulching, laying netting as required, and otherwise preparing and establishing a uniformly grassed area as specified herein. Areas requiring Type A surface restoration shall be so designated on the drawings.

1.1.2 Type B Surface Restoration: Consists of furnishing and placing all the necessary materials to restore areas affected by construction to a condition equal to that which existed prior to construction. Areas requiring Type B surface restoration shall be so designated on the drawings.

1.1.3 Pavement Repair and Replacement shall conform to Section 02575 - ROADWAY AND SIDEWALK SURFACE REPLACEMENT.

2. MATERIALS

2.1 Topsoil Stripped and Stored: Topsoil stripped, stored, and placed shall be fertile, friable, with liberal content of humus, and capable of sustaining vigorous plant growth.

2.2 Topsoil to be Furnished: If the stripped topsoil is not adequate to complete the work, sufficient topsoil shall be furnished and shall be a natural, fertile, friable soil, possessing characteristics representative of productive soils in the vicinity. It shall be obtained from naturally well-drained areas. It shall not be excessively acid or alkaline (except for those plants requiring acid soil) nor contain toxic admixture of subsoil and shall be cleaned and reasonably free from clay lumps, stumps, roots, or similar substances, debris, or other objects which might be a hindrance to planting operations.

2.3 Lime: Lime shall be ground limestone containing not less than 85% of total carbonates and shall be ground to such a fineness that 50% will pass through a 100 mesh sieve and 90% will pass through a 20 mesh sieve. Coarser material will be acceptable, provided the specified rates of application are increased proportionately on the basis of quantities passing the 100 mesh sieve.

2.4 Fertilizer: Commercial fertilizer shall be formula 12-12-12, and shall conform to the applicable state fertilizer laws. It shall be uniform in composition, dry, and free flowing, and shall be delivered to the site in the original, unopened containers, each bearing the manufacturer's guaranteed analysis. Any fertilizer which becomes caked or otherwise damaged, making it unsuitable for use, will not be accepted.

2.5 Herbicide: Herbicide shall be a pre-emergence type for mixing with soil designed to eliminate noxious weeds without harming landscape plants.

2.6 Lawn Materials: Grass seed shall be mixed and certified by the dealer and shall be a blend of K-31 fescue and Lespedeza, acceptable to the landowner. The seed shall be uniformly sown.

2.7 Water: The Contractor shall make, at his expense, whatever arrangements may be necessary to insure an adequate supply of water to meet the needs of this contract. He shall also furnish all necessary hose, equipment, attachments, and accessories for the adequate watering of plants as may be required to complete the work as specified.

2.8 Netting: Netting shall be a uniform, open, plain weave mesh of single jute yarn or 25 to 35 pound natural, unbleached kraft paper. Minimum width of netting fabric shall be 42 inches. Jute netting shall have 76 warp ends per 48 inch width and 41 weft ends per yard, minimum. Kraft paper netting shall have 5.5 warp yarns by 3.5 filling yarns per inch. Staples for anchoring netting shall be No. 11 gauge steel wire, six (6) inches long.

2.9 Mulch: Vegetative mulch shall be the shredded cereal straw from stalks of oats, rye, wheat, or barley. The straw shall be free of prohibited weed seeds as stated in the State Seed Law; shall be relatively free of all other noxious and undesirable seeds; and shall be clean, bright, and dry enough to spread properly. A binder emulsion shall be applied to prevent straw from blowing.

3. EXECUTION

3.1 All areas within the limits of fine grading not required to be developed otherwise shall be planted with grass.

3.2 Soils Test: The Contractor shall, at his own expense, contact the County Extension Agent and secure a soil test of the topsoil. If recommended by this test, the topsoil shall be limed in quantity recommended by the Extension Agent. (Generally a soil pH of 6.0 to 6.5 is desirable.) Three copies of the soil test shall be sent to the Owner along with recommendations on lime use. Estimates of lime requirements are as follows:

POUNDS OF GROUND LIMESTONE PER 1,000 SQUARE FEET

pH	Light Sandy Soil-Pounds	Medium Sandy Soil-Pounds	Loam & Silty Loam-Pounds	Clay Loam Pounds
4.0	90	120	172	217
4.5	82	112	157	202
5.0	67	90	127	150
5.5	52	67	97	120
6.0	None	None	None	None

3.3 Time of Planting for Lawns: The Contractor shall coordinate the work so that lawn areas will be topsoiled and graded to meet the planting schedule as follows:

3.3.1 Preferred Time of Planting: February 1 to April 20.

3.3.2 Alternate Time of Planting: September 1 to October 30. For this time of planting, the Contractor shall keep the lawn well watered through the summer, or until the project is accepted by the Owner.

3.4 The Owner is aware that in some cases, it would create a hardship to maintain the above schedule. If the Contractor wishes to make recommendations on other times when seeding could be done, the Owner will consider these recommendations. However, methods or time of planting shall be agreed to, in writing, before commencing this portion of the work or the above schedule shall be followed.

3.5 Preparation of Topsoil: The topsoil shall be graded and uniformly compacted according to Section 02260 - FINISH GRADING.

3.6 Sulphur: If the addition of sulphur is necessary, it shall be applied at a rate of two pounds per 1000 square feet.

3.7 Applying Fertilizer: Commercial fertilizer shall be applied at the rate of 20 pounds per 1,000 square feet to the lawn areas being prepared for planting. Fertilizer may be applied with seed, however, application after sprouting of the lawn seed is preferred.

3.8 Sowing of Seed: Immediately before any seed is to be sown, the ground shall be scarified as necessary and shall be raked until the surface is smooth, friable, and of uniformly fine texture. Lawn areas shall be seeded evenly at the rate of 100 pounds per acre, lightly raked, and watered with a fine spray. The method of seeding may be varied at the discretion of the Contractor on his own responsibility to establish a smooth, uniformly grassed lawn.

3.9 Mulching: Within 24 hours after seeding, mulch with binder emulsion shall be spread evenly over the entire area at the rate of 2½ tons per acre.

3.10 Optional Establishment of Lawns: At the option of the Contractor, sod may be used for establishing all or part of grass lawn areas. Sod on slopes shall be held in place by wooden pins about one inch square and six inches long driven through the sod into the soil until they are flush with the top of the sod. Before any sod is laid, all soft spots and inequalities in ground shall be corrected. Fertilizer spread shall be raked in. Sod shall be laid so that no voids occur and shall be tamped or rolled. The complete sodded surface shall be true to finish grade, even, and firm at all points. Sod shall be placed so that the surface of the compacted sod will be slightly below the surrounding surface soil. All soils tests and pH adjustment specified previously shall be undertaken prior to sodding.

3.11 Clean-up: Any soil, manure, peat or similar material which has been brought onto paved areas by hauling operations, or otherwise, shall be removed promptly, keeping these areas clean at all times. Upon completion of the planting, all excess soil, stones, and debris which have not previously been cleaned up shall be removed from the site or disposed of. All lawns and planting areas shall be prepared for final inspection.

3.12 Maintenance: Maintenance shall begin immediately after planting and shall continue in accordance with the following requirements:

3.12.1 Repairs: Repairs to lawns or replacement of plants necessary during the maintenance period due to removal, vandalism, or acts of neglect on the part of others may be done on request by the Owner and will be done at the expense of the Owner.

3.12.2 Maintenance: Lawns shall be protected and maintained by the Contractor by watering, mowing, and replanting as necessary for at least thirty (30) days and as much longer as is necessary to establish a uniform stand of the specified grasses, and until acceptance by the Owner.

3.13 Inspection: Inspections of the work to determine completion of contract work exclusive of possible replacement will be made by the Owner at the conclusion of the maintenance period upon written notice requesting such inspection submitted by the Contractor at least 10 days prior to the anticipated date. The condition of lawns will be noted and determination made by the Owner as to whether maintenance shall continue in any part. After inspection, the Contractor will be notified in writing by the Owner of acceptance of seeding work exclusive of the possible replacement.

3.14 Guaranty and Replacement: Lawns and planting shall be guaranteed for a maximum of one year after the conclusion of the maintenance period, or for the duration of one full growing season, after planting, whichever is longer, and shall be alive, and in satisfactory growth at the end of the guaranty period, subject to normal care as recommended by this Contractor after acceptance of the work. At the end of the guaranty period, inspection will be made by the Owner upon written notice requesting such inspection submitted by the Contractor at least 10 days before the anticipated date. Any planting required under this contract that is dead or not in satisfactory growth, as determined by the Owner, shall be removed from the site. These shall be replaced as soon as conditions permit, but during the normal planting season.

1. GENERAL

1.1 Description: The work of this section consists of furnishing all labor, materials, equipment, and tools for construction of asphaltic concrete paving for streets and drives. The asphaltic concrete shall be placed in one or more courses on a prepared stone base or underlying course in conformity with the lines, grades, thicknesses, and typical cross sections shown on the plans, or as designated by the Engineer.

2. MATERIALS

2.1 Base Course: Shall conform to specification Section 02232 - GRANULAR STONE BASE.

2.2 Prime Coat: The prime coat shall be medium-curing, cut back (MC-30) asphalt and shall conform to AASHTO M-82.

2.3 Tack Coat: The tack coat shall be an emulsified asphalt (SS-1) and shall conform to ASTM 977.

2.4 Surface Course: The asphaltic concrete surface course shall comply with MoDOT Type BP-2 Section 401 and associated MoDOT specifications.

2.5 Binder Course: The asphaltic concrete binder course, if job specified, shall comply with MoDOT, Section 301, and shall consist of a mineral aggregate compound of crushed stone and/or crushed gravel, sand gravel, sand, mineral filler, if needed, and asphaltic cement in such proportions that the composition of the finished mix is within the following range:

	% Min.	% Max.
Passing 1-inch sieve	100	--
Passing ½-inch sieve	60	90
Passing No. 4 siiev	35	65
Passing No. 8 sieve	25	50
Passing No. 30 sieve	15	35
Passing No. 200 sieve	5	12
Asphalt Cement	3.5	6

2.6 Asphalt Cement: Shall be AC-10, AC-20, AC-30 asphalt cement, or approved by Engineer homogenous and free of water and shall not, in heating, foam below 232 degrees centigrade. Asphalt cement shall be prepared by refining crude petroleum by suitable methods, and shall conform to the requirements of Section 1015 of the Missouri Standard Specifications for Highway Construction.

2.7 Samples: At least 15 days prior to preparing any of the mixture on the project, the contractor shall obtain in the presence of the Engineer, representative samples of the asphalt cement and mineral aggregate for tests. The samples of materials shall be of the size specified by the Engineer and the contractor shall submit the samples to a qualified laboratory for testing. The contractor shall also submit for the Engineer's approval, a job-mix formula for each mixture to be supplied for the project. No mixture will be accepted for use until the job-mix formula for the project is approved by the Engineer.

3. EXECUTION

3.1 Existing Roadway: The existing roadway surfacing shall be removed to the depth cross sections shown on the plans.

3.2 Sub-grade Preparation: Shall be as described in specifications Section 02200 - EARTHWORK.

3.3 Base Course:

3.3.1 Contractor shall furnish, place, and compact a thickness of base course as specified on the plans of crusher run limestone on a prepared sub-grade, as described in Section 02232 - GRANULAR STONE BASE.

3.3.2. In no case shall the Contractor be permitted to place the granular base or manipulate it on muddy or frozen sub-grade. Any mixture containing frost or frozen particles shall not be placed on the sub-grade, or compacted.

3.3.3 The granular base shall be handles in such manner as to avoid undue segregation. If segregation occurs or if the mixture becomes contaminated, such segregation or contaminated material shall be removed and replaced with material of suitable quality and gradation. Segregated or contaminated materials ordered removed by the Engineer shall be replaced at the sole expense of the Contractor.

3.3.4 Preliminary compaction shall be performed by means of pneumatic-tired rollers. After preliminary compaction has been secured, finish compaction shall be carried to completion by means of self-propelled steel-wheeled rollers weighing not less than ten tons. Shaping and compacting shall be carried on until a true, even, uniform base course of proper grade, cross-section, and density is obtained. Proper moisture content shall be maintained by wetting the surface or allowing it to dry as required during shaping and compacting operations. The use of excess of water resulting in run-off or in the formation of a slurry on the surface shall be avoided. The stone base shall be compacted to not less than 95 percent of the maximum density of optimum moisture content as determined by Mod AASHTO T-99.

3.4 Prime Coat: The prime coat shall be place only on a dry or slightly damp, clean base free from loose or foreign material when atmospheric temperature is above 50°F. The rate of application shall be from 0.2 to 0.5 gallons per square yard, depending upon the surface texture. Temperature of the prime coat at the time of application shall not be less than 100°F, or more than 180°F. Any prime coat overspray on adjacent concrete surfaces shall be removed to the Owner's satisfaction.

The prime coat will be allowed to cure a minimum of 24 hours before application of the surface course.

3.5 Tack Coat: The tack coat shall be placed on an existing asphaltic surface which is free of all dust, loose material, grease, or other foreign materials when atmospheric temperature is above 40°F. The asphalt emulsion shall be applied uniformly with a pressure distributor at a rate of application from 0.02 to 0.10 gallons per square yard. Water may be added to the asphalt emulsion and mixed therewith in such proportion that the resulting mixture will not contain more than 50 percent of added water. The application of the resulting mixture shall be such that the original emulsion will be spread at the specified rate. Temperature of the tack coat at the time of application shall not be less than 75°F or more than 130°F.

The tack coat shall be allowed to properly cure and the tacked surface shall be cleaned of all dirt and surplus sand before the next course is placed.

The tack coat shall be applied in such a manner as to cause the least inconvenience to traffic and to permit one-way traffic without pickup or tracking of the asphalt emulsion.

3.6 Surface and Bituminous Base Course: The asphalt concrete surface course shall be a hot plant-mix of specified thickness suitable placed and compacted, and shall be placed in layers not exceeding three inches in compacted thickness. The asphaltic concrete shall be delivered to the work area in dump trucks properly lubricated to prevent sticking. The asphaltic concrete shall be covered during transit, and shall arrive at the job site at not less than 275°F. Placing of asphaltic concrete shall be as follows:

3.6.1 The asphaltic concrete shall not be placed, when either the air temperature or temperature of the surface on which the mixture is to be placed is below 50°F for the surface course or 40°F for the bituminous base course, or on any wet or frozen surface, or when weather conditions prevent the proper handling or finishing of the mixture, or when authorized by the Engineer.

3.6.2 The asphalt concrete surface shall be compacted while the mixture is hot with power roller equipment as specified. Rolling shall continue until a uniform, even textured surface of the thickness specified is produced. Rolling shall begin at the outer edge and continue toward the center. Each pass shall overlap the preceding one by at least one-half of the rear roller width. Delays in rolling freshly spread mixture will not be tolerated. Traffic shall not be permitted on the finished pavement until it has cooled to atmospheric temperature. Final rolling shall be done with either a two or three-wheel tandem-type roller weighing not less than 10 tons.

3.6.3 Around areas not accessible to power rollers, compaction shall be secured by hand tamping, and all joints must be effectively sealed.

3.6.4 The finished surface shall be rolled until it is free from waves and irregularities. All surplus material shall be removed prior to final acceptance.

3.6.5 If the asphaltic concrete construction consists of more than a single layer, each layer shall be compacted as specified and allowed to cool to the ambient temperature before the next layer is placed.

3.6.6 The contractor shall provide a leveling course at areas and at a thickness necessary to obtain the elevation and cross sections as shown on the plans, prior to placing the surface course. The areas of existing asphaltic pavement which require an overlay of asphaltic concrete shall be as specified on the plans. The finished surface course as placed shall be performed in such a manner as to provide the smoothest possible riding surface.

3.7 Equipment: All equipment, tools, and machines used in the performance of the work shall be subject to the approval of the Engineer and shall be maintained in satisfactory working condition at all times.

3.7.1 The Asphalt Distributor: Shall be a machine manufactured for the specific purpose of applying heated asphaltic materials by pressure spray application. The Distributor shall be designed to permit the application of the heated asphalt material in a uniform spray without atomization and at the rate, temperature, and pressure specified by the Asphalt Institute. The Distributor shall be equipped for circulation and agitation of the bituminous material during the heating process.

3.7.2 The Power Roller: Shall be a self-propelled type weighing at least eight tons and shall be suitable for rolling bituminous pavements. A five ton roller may be used around radii and driveways where rolling with an eight ton roller is not feasible. The roller shall be equipped with adjustable wheel scrapers and a sprinkling system which will uniformly wet the wheels to prevent adherence of bituminous material to them. Rubber tired rollers may be used after initial rolling with eight ton roller.

3.7.3 Mechanical Spreaders and Finishers: Shall be adjustable and capable of spreading upon the prepared surface a tamped, screeded and finished wearing surface of asphalt concrete of the specified thickness.

3.7.4 Broom Drag and Power Brooms: Shall be of the type suitable for effectively cleaning the surface to be treated.

3.7.5 Automatic Screed Control: The use of automatic screed control devices will be required except for paving small irregular areas, shoulders, entrances, and side road connections. The screed of the mechanical spreading and finishing machine shall be regulated by an automatically controlled grade leveling and slope control device approved by the Engineer. The device shall be of a standard commercial quality adapted to the type of paver used and shall provide control for producing a uniform surface to the established grade, and a cross slope conforming to the requirements of the typical section.

3.7.5.1 The initial pass of the paver, when placing the first continuous layer, shall be made with the sensor following a traveling reference plane not less than 30 feet in length that is an integral part of the paver. An established grade reference is required by the contract, the contractor will establish the grade and will furnish variable thickness values at intervals along the center line of the roadbed for the use in setting a grade reference. Regardless of the method used for placing the first continuous layer, all other layers shall be placed by use of a shoe-type sensor or indicator, the traveling reference plane, or by additional use of the established grade reference.

3.8 Compaction and Testing:

3.8.1 After final rolling, the finished course shall at no point have a density less than ninety-five (95%) percent of the laboratory compacted density. Field determination of the density shall be the responsibility of the Contractor and considered incidental to the paving operations. Contractor shall provide access to the Engineer and his representatives for any and all testing of asphaltic concrete paving.

3.8.2 Testing Pavement: The finished courses shall have the minimum thickness shown on the plans. Tests will be made to insure that each course is being constructed of proper thickness, composition, and density. The Contractor shall cut samples from any layer of the compacted mixture at locations designated by the Engineer and shall deliver them to the testing laboratory in good conditions. Samples may be obtained by wither sawing with a power saw or by drilling 4-inch diameter cores. Each sawed sample shall consist of a single piece of the pavement of the size designated by the Engineer, but not larger than 12 inches square.

3.8.3 Density Samples: Each sample for laboratory density determination shall consist of four cores. All samples, whether sawed or cored, shall consist of an undisturbed portion of the compacted mixture removed for the full depth of the layer or course to be tested.

3.8.4 Thickness Samples: Each sample taken for course thickness shall consist of one 4-inch diameter core taken for the full depth of the course. Each sample taken for total compacted thickness shall consist of one 4-inch diameter core taken for the full depth of bituminous construction. Total thickness samples shall be obtained after all bituminous construction is completed on the project and shall be taken at locations designated by the Engineer.

3.8.5 Surface Restoration: The surface from which samples have been taken shall be restored by the Contractor with the mixture then being produced not later than the next day of plant operation, if construction is still in progress. If bituminous construction has been completed, the surface from which samples have been taken shall be restored within 48 hours with hot mix asphalt acceptable to the Engineer.

3.8.6 Grade and Surface Smoothness Requirements: The finished surface of the bituminous courses shall conform to the grade lines and elevations shown on the plans. The grade and crown

slopes shall not deviate more than 0.05 feet from the plan grades. The surface shall not vary more than ¼ inch when a 12 foot straightedge is laid on the surface parallel with the centerline of the paved area or transverse from the crown to pavement edge.

3.8.7 Quality of Samples & Tests: The Contractor shall provide as an obligation incidental to the performance of the contract, the following minimum quantity of samples and tests.

3.8.7.1 From the paving spreader, not less than one (1) composite sample for each 1000 square yards or less of surfacing to be constructed. This sample shall be tested for asphaltic cement content, aggregation gradation and content, and attainable density.

3.8.7.2 From the compacted surfacing, not less than one (1) core sample for each 2500 square yards of asphalt surfacing applicable for thickness determination and laboratory tests. On the compacted surface, not less than one (1) in place density test for each 300 square yards of asphalt surfacing applied.

3.8.8 Test Designation:

3.8.8.1 Asphaltic Cement Content: Compacted and uncompacted samples shall be tested by procedures established by ASTM D2172, latest revision, to determine aspbalt cement content.

3.8.8.2 Aggregate Gradation: Coarse and fine aggregate from asphaltic concrete samples shall be tested for gradation by ASTM Test Method C136, latest revision. Mineral filler content shall be determined by Test Method ASTM C117, latest revision.

3.8.8.3 Density: In place density shall be determined by ASTM Test Method D2950. Reference density shall be determined by ASTM D1188, or ASTM D2726 procedures and ASTM procedures D2041.

4. REMEDY AND CORRECTION OF DEFICIENCY

4.1 The Contractor shall provide, at not cost to the Owner, remedy and correction of deficiencies in the asphaltic surfacing, in the following specified form and procedures:

4.1.1 Deficiency in Asphalt Cement: Should test on uncompacted samples or core samples indicate the asphalt content is below the specified amount, the Contractor shall provide additional asphaltic concrete overlays to the entire surfacing area for which the tests indicated an asphalt cement deficiency. One (1) inch of compacted asphaltic concrete overlay shall be added for each one-tenth percent the asphalt cement content falls below specified minimum. The percent deficiency shall be determined from the average of the percent asphalt cement content from five samples.

4.1.2 Deficiency in In-Place Density: Should tests on core samples or in-place density tests indicate density of the asphaltic concrete to be below the specified minimum density, the basis of payment for deficiency in in-place densities for any one day's run of asphaltic concrete shall be determined as follows:

Average Density (%)	Percent of Payment

as determined from 4 in-place density
tests or total tests performed
during each day's run of asphalt

95-100%	100.0%
94.9	100.0
94.8	99.9
94.7	99.8
94.6	99.6
94.5	99.4
94.4	99.1
94.3	98.7
94.2	98.3
94.1	97.8
94.0	97.3
93.9	96.3
93.8	94.1
93.7	92.2
93.6	90.3
93.5	87.9
93.4	85.7
93.3	83.3
93.2	80.6
93.1	78.0
93.0	75.0
below 93.0	Reject

4.1.3 Deficiency in Surface Limit: Surface finish shall be provided such that surface water drains to ditches and guttering. Depressions in the surfacing, which are exhibited by ponding of water, shall be remedied by the addition of an overlay of asphaltic concrete to eliminate the depression.

4.1.4 Deficiency in course and total thickness: Should tests on core samples indicate the thickness is less than the design thickness, the Contractor shall provide additional asphaltic concrete overlay to the entire surfacing area for which the tests indicated a thickness deficiency. One inch minimum of compacted asphaltic concrete overlay shall be added to those deficient areas. The areas which are found to be deficient shall first be cold milled ½ inch minimum over the entire deficient area, then overlaid with a thickness sufficient to bring the area up to the design thickness and grade. The deficient area shall be determined in accordance with 3.6.7.2 and/or from core samples taken at a minimum distance of 200 feet between cores, or as approved by the Engineer.

5. MEASUREMENT AND PAYMENT

5.1 Asphaltic concrete paving including prime and tack coats and hot-mixed asphaltic concrete paving, shall be measured and paid for at the price bid per square yard as set forth in the Bid Schedule. Any deficiency as determined in 4.1 shall constitute a percentage reduction in payment for the square yardage of asphaltic concrete applied for any one day's application and adjustments made accordingly. Such price and payment shall constitute full compensation for all earthwork, tools, labor, equipment, materials, testing, and incidentals for complete and in-place asphaltic paving.

1. GENERAL

1.1 Description: The work of this section shall consist of furnishing all labor, materials, tools, equipment, and incidentals necessary to replace all roadway surfaces and sidewalks removed during utility construction. This section shall include, but not be limited to, vehicular and pedestrian pavements, and surfacings of stone, gravel, asphalt, and Portland cement concrete, in addition to parking areas.

2. MATERIALS

2.1 Portland Cement Concrete: Shall conform to Section 03300 - CAST-IN-PLACE CONCRETE.

2.2 Hot-Mix Asphaltic Concrete: Shall conform to Missouri Highway and Transportation Commission Standard Specifications for type BP-2 Plant Mix Bituminous Pavement as set forth in Section 401 of the Standard Specifications.

2.3 Crushed Stone Surfacing: Crushed stone base shall conform to material specified and shall be produced by an approved source. Aggregate shall be mechanically crushed limestone or dolomite. It shall not contain more than 15 percent deleterious rock and shale. Sand may be added only for the purpose of reducing the plasticity index of the fraction passing the No. 40 sieve in the finished product. Any sand, silt, and clay, and any deleterious rock and shale shall be uniformly distributed throughout the mass. The aggregates shall conform to the following gradation requirements when tested utilizing wet preparation techniques:

Percentage by Weight Passing Each Sieve:

1 inch Sieve.....100%
1/2 Inch Sieve.....60 - 90%
No. 4.....40 - 60%
No. 40.....15 - 35%

Plasticity Index of the fraction passing the No. 40 sieve shall not exceed 6. The crushed stone base shall be compacted to not less than 95% of maximum density at optimum moisture content as determined by Mod. AASHTO T-99.

2.4 Chip and Seal Pavement Repair:

2.4.1 Aggregate: For aggregate seal asphalt paving, the aggregate shall consist of a combination of crushed stone and/or crushed gravel, well-graded within the following limits:

Sieve Size	Percent Paving by Weight
1/2"	90-100%
3/8"	48-80%
#4	0-15%
#6	0-5%

2.4.2 Liquid Asphalt: The liquid asphalt shall be grade CRS-2. Should the Contractor desire, (because of climatic conditions or otherwise) he may request a change in the liquid asphalt grade. No change shall be made until the Contractor receives written approval from the Owner.

3. EXECUTION

3.1 General: Existing paving shall be cut vertically and horizontally to straight lines. The trench shall be backfilled with granular stone bedding or controlled backfill material compacted to Range B compaction requirements (see Section 02250 - COMPACTION CONTROL AND TESTING) to within eight inches of the final roadway surface. The top eight inches shall be backfilled with crushed stone base compacted level with the existing riding surface of the roadway. This level shall be maintained by the Contractor until all secondary settling has occurred. Any crushed stone required to maintain the trenches in a suitable condition for traffic during this period shall be furnished at the Contractor's expense. When the trench has been properly backfilled and has settled sufficiently to permit final repairs, roadway surfacing shall be applied according to this specification. At the time of final repairs, the Contractor shall remove sufficient material to allow placement of roadway surfacing to the thicknesses specified as follows.

3.2 Roadway Surface Replacement:

3.2.1 Portland Cement Concrete: Edges of existing pavement at the trench shall be trimmed vertically to produce a neat even edge. A minimum 8-inch thick concrete slab shall be placed to match the elevation of the existing pavement, as shown on the drawings.

3.2.2 Hot-Mix Asphaltic Concrete Edges of existing pavement at the trench shall be trimmed vertically to produce a neat, even edge. A minimum of 4-inches of hot-mix asphaltic shall be placed in two lifts to match the elevation of the existing pavement, as shown on the drawings.

3.2.2.1 The surface to receive the asphalt concrete shall be cleaned of all loose material, dust, and foreign matter prior to the application. The primer or tack coat, as required, shall be applied upon a dry surface only at a rate of 0.15 gallons per square yard. Forms may be of any material or design provided they secure the designed grade control. It shall be the responsibility of the Contractor to set and maintain necessary grade stakes and forms, and execute the work to the lines, grades, cross sections, and dimensions shown on the plans.

3.2.2.2 After spreading, the mixture shall be thoroughly and uniformly compressed by a three-wheel or tandem power-driven roller or rollers, weighing not less than 200 pounds per inch of tread width, as soon after being spread as it will bear the roller without undue displacement. Delays in rolling freshly spread mixture will not be tolerated. Rolling shall start longitudinally at the sides and proceed toward the center of the pavement overlapping on successive trips by at least one-half the width of a wheel. Alternate trips of the roller shall be of slightly different lengths.

3.2.2.3 After final compression, the finished course shall at no point have a density less than ninety-five (95) percent of the laboratory compacted density. At least two (2) in-place density samples shall be taken and tested.

3.2.2.4 No traffic shall be permitted on the finished pavement until it has cooled to atmospheric temperature.

3.2.3 Chip and Seal Pavement Repair: For this type repair, a double layer of chip and seal resurfacing over the entire roadway width will be utilized.

3.2.3.1 The existing roadway shall be bladed to eliminate minor depressions and humps. Following the blading operation, the surface shall be thoroughly cleaned and swept to remove all mud, matted earth, dust, and other foreign material.

3.2.3.2 A prime coat of liquid asphalt shall be applied at the rate of 0.30 gallons per square yard at a minimum temperature of 120°F for asphalt grade CRS-2. On the primed base, a course of aggregate shall be spread at the rate of twenty-five (25) pounds per square yard. This stone shall be roller compacted from the sides to center with a steel wheeled roller weighing a minimum of five tons.

3.2.3.3 Immediately following the compaction of the first course of asphalt and aggregate, a second course, identical to the first, shall be applied. The finish surface shall be swept to remove any loose stones.

3.2.3.4 No traffic shall be allowed on the finished surface until it has cooled to atmospheric temperature.

3.2.4 Crushed Stone: Trenches along or across unpaved roadways, including country roads, and city streets, as well as on dirt, or gravel shoulders of paved streets, roads, or highways, shall be backfilled in compliance with these specifications. The trench shall be backfilled to a level with the existing riding surface of the roadway. When the trench has been properly backfilled and has settled sufficiently to permit final repairs, the backfill shall be removed as necessary for crushed stone surfacing. The crushed stone shall be rolled and thoroughly compacted in layers to a minimum finished thickness of six-inches.

3.3 Sidewalk Replacement: The existing concrete sidewalk and base material shall be removed for a distance equal to the trench width plus two feet as shown on the drawings. The trench shall be backfilled to a height that will allow the placement of four inches of crushed stone and a four-inch thick concrete walk above. The elevation of the top of the new sidewalk section shall match that of the existing walk.

1. GENERAL

1.1 Description: This section specifies the furnishing and installation of all storm sewer pipe shown on the drawings and as specified herein.

2. MATERIALS

2.1 Ductile Iron Pipe and Fittings:

2.1.1 Ductile Iron Pipe: All ductile iron pipe 3 inches or larger in diameter for all joint types shall conform to ANSI Specification A21.51-1976, and AWWA Specification C151-1976.

The ductile iron pipe thickness class shall be Class 50. The thickness class shall be based on laying condition 5 with five (5) feet of cover.

2.1.2 Fittings: Ductile gray iron fittings shall conform to ANSI Specification A21,10 (AWWA C110) for dimensions, with 70-50-05 metal per ASTM Designation A536-70.

2.1.3 Coatings: The inside and outside of all ductile iron pipe and fittings (including cement mortar lined pipe) shall be bituminous coated with either coal tar or asphalt base of approximately 1 mil thickness.

2.1.4 Joints: Mechanical and push on joints for pipe and fittings shall conform to ANSI A21.11, rubber gasket joints for cast iron and ductile iron pressure pipe fittings.

2.2 Reinforced Concrete Pipe:

2.2.1 Pipe: Reinforced concrete pipe shall be designed and manufactured to meet ASTM C76, latest revision for Class III pipe with Wall B thickness. Pipe sections shall be a minimum of twelve (12) feet in length, except for short sections for closure lengths. At manholes or curb inlets where pipe sections connect thereto, sections shall be four (4) feet maximum length to place a joint within four (4) feet of the inside face of the manhole. Certification of pipe shall include assurance that absorption does not exceed six (6) percent when tested per ASTM C497, latest revisions.

2.2.2 Joints: Pipe shall be provided with joints designed to conform to Section 5.7.1 and 5.7.1.1 of ASTM C361, latest revision, and shall be designed to withstand, without cracking, the gasket compression plus a differential load across the joint equal to 4000 pounds per foot of internal diameter.

2.2.3 Flexible Gaskets: Shall be circular cross section, confined O-Ring gaskets, conforming to ASTM C443, latest revision, or approved mastic joint filler material. Gasket shall serve as sole means of sealing the joint.

2.3 Welded Steel Encasement Pipe: Shall be smooth wall, welded steel pipe with a minimum wall thickness as specified in American Petroleum Institute Code No. 1102. The provision of this code is listed as follows:

Nominal Diameter	Nominal Wall Thickness (Uncoated)
Under 12-3/4"	0.188" Min.
12-3/4"	0.282" Min.
14" and 16"	0.313" Min.
18"	0.344" Min.
20"	0.375" Min.
22"	0.407" Min.
24" and 26"	0.438" Min.
28"	0.469" Min.
30"	0.501" Min.
32" and 34"	0.563" Min.
36", 38" and 40"	0.626" Min.
42"	0.688" Min.

2.4 Corrugated Steel Pipe w/Fiber Bonded, Smooth Lined, Bituminous Coating:

2.4.1 The materials used in the fabrication of smooth lined asbestos-bonded corrugated steel pipe shall conform to the requirements of ASTM Designation A569 with 0.20% minimum copper added. In addition, the metal sheets shall be coated on both sides with a layer of fibers, applied in a sheet form by pressing it into a molten metallic bonding medium. Immediately after the metallic bond has solidified, the fibers shall be thoroughly saturated with a bituminous saturant. The finished sheets sball be of first class commercial quality, free from blisters and unsaturated spots.

2.4.2 Except as modified herein, the finished pipe shall conform to the requirements of AASHTO Designation M-36. In addition, the pipe shall be coated as required in AASHTO Designation M-190, Type A, and shall be lined on the inside of the pipe so that a smooth surface will be formed by centrifugally filling the corrugations to a minimum thickness of 1/8 inch above the crests. The interior lining shall be applied by a centrifugal or other approved method and shall be free from sags and runs. The lining material shall meet the requirements of AASHTO Designation M-190. Pipe shall be fabricated with riveted, lap joint construction and shall have the rivets located in the inside valleys of the corrugations. In addition, all pipe seams shall be made watertight through the use of a suitable seam sealant.

2.4.3 Connecting bands shall conform to the requirements outlined in ASTM Designation A-444 for chemistry, weight of galvanizing and permissible variations in dimensions. In addition, bands shall be .064" thick minimum, 10 ½" wide minimum, and shall be drawn together by two ½" bolts through the use of a bar and strap suitably welded to the band. The pipe shall have at least two annular corrugations rolled into each end; the band shall engage each pipe end with one matching annular corrugation. The end corrugation shall contain a 3/8" O-Ring gasket. The gasket shall be in accordance with ASTM C-361. Butyl sealant tape shall be used to connect the band lap. Bands shall be of bituminous coated material only.

2.4.4 Corrugated metal pipe and pipe arch shall be of 2 2/3" x ½" corrugations for pipe 12 through 30 inches in diameter and 3" x 1" for pipe 36 through 120 inches in diameter.

2.5 Ferrous Casting: All castings, including manhole rings, manhole covers, curb inlets, catch basin gratings, catch basin frames and manhole steps shall be designed and manufactured in conformance with ASTM, AASHTO, ASA, or Federal Specifications for Ductile Iron.

2.5.1 Castings shall be of uniform quality, free from blowholes, porosity, hard spots, shrinkage distortion or other defects. They shall be smooth and well cleaned by shotblasting.

2.5.2 Castings shall be furnished with a non-brittle and non-tacky coat of asphalt paint.

2.6 Corrugated Steel Pipe:

2.6.1 Material shall be in accordance with MHTD Standards, Specification Section 725.

3. SUBMITTALS

3.1 The Contractor shall provide to the Engineer six (6) copies of Letters of Certification from the manufacturer of steel reinforcing bars, pipe, fittings, gaskets, ferrous metal castings, and incidental elements of materials certifying that materials provided were manufactured in accordance with prevailing specifications and that all materials and manufacturing provided will meet or exceed standards of quality set forth in those specifications.

4. INSPECTIONS

4.1 The Contractor is hereby advised that a Resident Project Representative will perform full time inspection of the work. It shall be the responsibility of the Contractor to notify the Owner and the Engineer before proceeding with any of the work.

5. EXECUTION

5.1 Laying Storm Sewer Pipe:

5.1.1 Pipe shall be laid using a laser beam or a grade rod that has an iron heel for the invert and notches for the grade line stretched over the sewer.

5.1.2 The alignment of all pipe lines between adjacent manholes shall be true to line and grade. The pipe line from manhole to manhole shall reflect the full bore of the pipe. The pipe section shall be truly centered into the adjacent pipe section at each joint.

5.1.3 At all pipe joints, the bedding shall be excavated sufficiently so that the pipe bell will not rest on the bedding material but all the weight of the pipe shall be evenly distributed along the entire length of the barrel of the pipe.

5.1.4 The flow lines shown on the profile drawings are the internal inverts of the sewer pipelines. The pipes and special fittings shall be laid to true line and grade throughout and all junctions, curves, branches, and other pieces required shall be properly excavated for and laid as shown on the drawings and as directed by the Engineer.

5.1.5 The sewer shall be constructed watertight at all points. Any leaks or other defects discovered at any time shall be immediately repaired, or that portion of the sewer shall be rebuilt, if necessary. In all cases, full length joints of pipe shall be used, except in making closures.

5.1.6 In laying the pipe, water shall be removed from the trench to an elevation below flowline while the pipe is being laid. No pipe shall be laid on frozen bedding materials.

5.1.7 The pipe shall not be rolled or dragged across the ground, truck bed, or other length of pipe. No weight should be placed on the pipe joint when the pipe is hauled, handled or stored.

5.1.8 Care shall be taken to insure that the joints of the pipe are clean and free of any foreign material, and be made properly using the jointing materials specified.

5.1.9 The interior of the pipe shall be kept free of superfluous material during construction and flushed out after completion.

5.1.10 At the close of each day's work, or when pipe is not being laid, the end of pipe shall be stopped to prevent access into the pipe.

5.1.11 Any pipe which settles or which is not in true alignment shall, upon orders from the Engineer, be taken up and relaid by the Contractor without cost to the Owner.

5.2 Pavement replacement: Asphaltic pavement shall be replaced according to the plans and in accordance with Section 02513 - ASPHALTIC CONCRETE PAVING.

5.3 Infiltration: Materials used for sewer pipe joints shall have satisfactory records for preventing infiltration and the entrance of roots. Leakage or infiltration in the case of wet trenches shall not be permitted to exceed 200 gallons per inch of pipe diameter per mile per day for any section of the system as determined by flow measurement in the pipe.

5.4 Testing: Hydrostatic testing will not be required. However, the Contractor shall use materials as specified herein and use good construction methods and workmanship for an in-place storm sewer that functions as intended.

6. MEASUREMENT AND PAYMENT

6.1 Gravity Sewer Pipe:

6.1.1 Measurement shall be on a lineal foot basis measured from centerline to centerline of manhole or from centerline of pipe to centerline of catch basin.

6.1.2 Payment shall be made at the unit price called out in the Bid Schedule for the diameter of sewer pipe set forth, and shall be considered full compensation for all labor, equipment, bedding, and incidentals to provide storm sewer pipe complete and in place.

6.2 Concrete Catch Basins:

6.2.1 Measurement of Standard Precast or cast-in-place Concrete Catch Basin shall be as a complete, in-place unit for each basin size and type.

6.2.2 Payment for Concrete Catch Basins shall be made at the unit price stated in the Bid Schedule for the type and size of basin. Payment shall constitute full compensation for concrete sections, precast and cast-in-place including reinforcement, cast iron frame and grate, cast iron curb inlet, steps, coatings, grout, sealants, excavation, backfill, curb rebuilding, labor, equipment and supervision for a complete unit.

6.3 Headwalls at CMPA Ends:

6.3.1 Measurement shall be as a complete, in-place unit at each location on the drawings.

6.3.2 Payment shall be in accordance with the unit price stated in the Bid Schedule. Payment shall constitute full compensation for excavation, materials, backfill, compaction, clean-up and preparation of embankments to receive rip-rap, labor, equipment and supervision for a complete unit.

6.4 Sealing Existing Laterals:

6.4.1 Measurement shall be as a complete, in-place sealed unit at each location that a lateral is to be left in place.

6.4.2 Payment shall not be made and shall be included in the item for which it is a part.

6.5 RCP Flared Pipe Ends or Beveled Pipe Ends:

6.5.1 Measurement shall be as a complete in-place unit at each location on the drawings.

6.5.2 Payment shall be in accordance with the unit price stated in the Bid Schedule. Payment shall constitute full compensation for excavation, bedding, backfill, compaction, clean-up, preparation of embankment to receive rip-rap, labor and equipment for a complete unit.

DIVISION 3 - CONCRETE

CONCRETE FORMWORK.....03100

1. GENERAL

1.1 Description: The work of this section consists of furnishing all materials, labor, tools and equipment necessary to construct all required form work to the lines and grades shown on the plans.

2. MATERIALS

2.1 All forms for exposed surfaces shall be built of sound plywood or other materials approved by the Engineer, closely fitted to provide the best surface possible without special lining.

2.2 Forms for surfaces not exposed may be built of sound lumber free from loose knots.

2.3 Form accessories to be partially or wholly embedded in the concrete, such as ties and hangers, shall be commercially manufactured type. The portion remaining within the concrete shall leave no metal within one inch of any surface which will be exposed to view.

3. EXECUTION

3.1 Forms: Forms shall conform to the shape, lines and dimensions of the concrete as shown on the Plans. Forms shall be provided for all vertical surfaces. The materials, design, and construction of formwork shall conform to the applicable portions of the American Concrete Institute Standard "Recommended Practice for Concrete Formwork" (ACI 347) and to these specifications.

3.2 Design: The design of the formwork shall be the responsibility of the Contractor.

3.3 Construction: Forms shall be built true to line and shall be mortar-tight and sufficiently rigid to prevent displacement or bulging between supports. Bends, chamfers and other offsets shall be provided when the forms are built. Joints shall be kept to a minimum and all joints shall be solidly backed by framing.

3.4 Preparation of Surfaces: Before forms are placed, material to form exposed surfaces shall be oiled thoroughly, and for unexposed concrete, forms may be oiled at the Contractor's option. All forms not oiled shall be wetted immediately before placing concrete. All formwork shall be cleaned free of dirt and construction debris before placing concrete and points at which water has gathered within the forms due to wetting shall be drained.

3.5 Removal of Forms: Formwork for walls, sides of slabs and other parts not supporting the weight of the concrete may be removed as soon as the concrete has hardened sufficiently to resist damage from removal operations.

3.6 Embedded Items, Opening, and Recesses:

3.6.1 General: All sleeves, inserts, grooves, anchors, recesses, and other items required for adjoining work or for its support shall be placed or formed prior to placing the concrete.

3.6.2 Related Trades: All of the various trades shall be given ample opportunity to furnish for installation all hangers, anchors, inserts, sleeves, frames and other items to be built into the concrete as shown on the Plans or the various manufacturers' drawings or specified herein.

3.6.3 Placing Embedded Items: Expansion joint material, waterstops and all other embedded items shall be positioned accurately and supported securely against displacement before placing concrete.

3.6.4 Formed Holes: Formed holes shall be formed with non-ferrous material which shall be removed after the concrete has hardened.

3.7 Formwork for beams, slabs and other parts that support the weight of concrete and construction live loads shall remain in place until the concrete has reached its specified 28-day strength. Formwork that supports the weight of concrete only, and no construction live loads, or other loads, shall remain in place for not less than seven (7) days or until the concrete has reached 75 percent of its specified 28-day strength. The concrete shall be presumed to have reached its strength when either of the following conditions has been met.

3.7.1 When test cylinders, field cured under the most unfavorable conditions prevailing for any portion of the concrete represented, have reached the required strength. Except for field curing and age at test, the test cylinders shall be taken and tested as specified herein.

3.7.2 When the concrete has been cured as specified herein for the same length of time as the age at test of laboratory-cured cylinders which reached the required strength. The length of time the concrete has been cured in the field shall be determined by the cumulative number of days or fractions thereof, not necessarily consecutive, during which the temperature of air in contact with the concrete is above 50°F, and the concrete has been damp or thoroughly sealed from evaporating and loss of moisture.

3.8 Contractor's Responsibility: In all cases, the Contractor shall be solely responsible for adequate support of the forms to safely carry the load of concrete without undue deflection. The Contractor shall be liable for injury or damage resulting from inadequate forms, falsework or from premature removal of same.

CONCRETE REINFORCEMENT 03200

1. GENERAL

1.1 Description: The work of this section consists of furnishing and hauling all reinforcement materials and all tools, labor, equipment, and incidentals necessary to complete this section.

2. MATERIALS

2.1 Reinforcing Steel: Reinforcing bars shall conform to "Standard Specifications for Deformed Billet-Steel Bars for Concrete Reinforcement", ASTM 615 or to the "Standard Specifications for Axle-Steel Deformed Bars for Concrete Reinforcement" ASTM A617, and shall be Grade 60.

2.2 Welded Wire Fabric: Welded wire fabric shall conform to "Standard Specifications for Welded Steel Wire Fabric" or ASTM A185.

3. EXECUTION

3.1 General: Unless otherwise indicated on the drawings or specified herein, all cutting and bending of reinforcement bars shall be done at the mill or shop prior to shipment. Cutting and bending in the field will be permitted only where shown on the Plans or to correct errors, damage by handling and shipping, and minor omissions in shop bending.

3.2 Storing and Cleaning:

3.2.1 All reinforcement shall be stored above ground on skids, pallets, or other supports and shall be protected from mechanical injury and from deterioration by exposure.

3.2.2 When placed in the work, reinforcement shall be free from dirt, detrimental scale, concrete, paint, oil, or other foreign materials. Tight, thin rust is not considered detrimental and will not require cleaning.

3.3 Placing: Except as shown on the drawings or specified herein, all placement of reinforcing bars, welded wire fabric, and bar supports shall conform to the latest edition of "Placing Reinforcing Bars, CRSI-SCRSI Recommended Practices", published by the Concrete Reinforcing Steel Institute. Bars may be moved as necessary to avoid interference with other reinforcing steel, pipes, or other embedded items.

3.4 Splices: When splices other than those shown on the Plans become necessary, they shall be located at areas of low stress and shall be subject to approval by the Owner.

1. GENERAL

1.1 Description: The work of this section shall include the furnishing, hauling, placing, curing and testing of all Portland cement concrete required by the Construction Drawings and herein specified.

2. MATERIALS

2.1 Portland Cement: Portland cement shall conform to "Standard Specifications for Portland Cement: ASTM C150 Type 1 or Type 1A. One sack of cement shall be considered as one cubic foot of volume or 94 pounds by weight.

2.2 Aggregates: Fine and coarse aggregates shall conform to "Standard Specifications for Concrete Aggregates", ASTM C33. The nominal maximum size of the coarse aggregate shall not be larger than one-fifth of the narrowest dimension between sides of forms, one-third the depth of the slabs, nor three-fourths of the minimum clear distance between reinforcing bars or between bars and forms, whichever is least. Coarse aggregate gradation shall conform to ASTM C33 Size 57.

2.3 Admixtures: Refer to Section 03301 - CONCRETE ADMIXTURES.

2.4 Mixing Water: Mixing water for concrete shall be fresh, clean and potable. Non-potable water may be used only if it produces mortar cubes having 7- and 28-day strengths equal to the strength of similar specimens made with distilled water, when tested in accordance with "Method of Test for Compressive Strength of Hydraulic Cement Mortars", ASTM C109.

2.5 Water Stops:

2.5.1 Water stops shall be provided for construction joints where noted on the Plans. Water stops shall be made of polyvinylchloride resin plastic.

2.5.2 Polyvinylchloride water stops shall beDurajoint® Polyvinyl chloride water stops, Type 3, as manufactured by Durajoint® Concrete Accessories, or approved equal.

2.6 Curing Compounds: All curing compounds shall conform to specifications for liquid membrane forming compounds for curing concrete ASTM C209 applied in accordance with manufacturer's recommendations.

3. PROPORTIONING CONCRETE

3.1 General: Proportions of aggregate to cement and water shall be such to provide a concrete mix which will work readily into corners and angles for forms and around reinforcement and other embedded items without causing segregation of materials.

3.2 Proportioning Ingredients: All ingredients shall be proportioned in order to obtain the following:

Type of Concrete	Min. 28-Day Com. Strength	Water-Cement Ratio (Maximum)	Air-Entrainment Percent	Min. Cement Content
Structural	4,000 psi	5 gal/sack	3½ to 6½ by volume	6½ SK/C Yd
Structural	3,500 psi	5¼ gal/sack	3½ to 6½ by volume	6 SK/C Yd
Fill	2,500 psi	6½ gal/sack	3½ to 6¼ by volume	5½ SK/C Yd

Slump

4" max., 2" min. - footings, heavy walls, piers, buttresses
5" max., 3" min. - light walls, slabs, beams, columns, stairs
3" max., 2" min. - concrete floors with monolithic finish

3.2.1 In no case shall the amount of fine aggregate be more than the amount of coarse aggregate (measured by weight) nor shall the amount of coarse aggregate be such as to produce honeycombing.

3.2.2 Portland cement concrete shall be proportioned and placed to provide an average compressive strength sufficiently high to minimize the number of compressive strength tests falling below the specified compressive strength for the concrete structure. Portions of concrete ingredients, including water-cement ratios, shall be established on the basis of laboratory trial batches to provide conformance with compressive strength requirements, workability, and consistency. When different materials are used for different portions of the project, each combination shall be evaluated separately. Strength tests shall be conducted on test specimens in accordance with ASTM C39 and ASTM C192, from the trial batches using different water-cement ratios. Tabular data showing the compressive strength of the concrete proportions with various water-cement ratios shall be provided to the Owner prior to placing of concrete on the jobsite.

3.2.3 Concrete shall be provided to develop a compressive strength of not less than 3,500 psi at 28-days for field cured cylinders. Concrete that, after curing, will be subjected to freezing temperatures while wet shall contain entrained air from 3.5 to 6.5 percent by volume. Concrete that is intended to be water-tight shall have a maximum water-cement ratio of 0.48 by weight.

3.3 Moisture: Moisture in the aggregate shall be measured and the quantity must be included in the water-cement ratio specified above.

3.4 Trial Batches: Full sized trial batches shall be made in the laboratory using the aggregates selected for the job to establish the correct proportions to give proper workability, strength, and texture with the water-cement ratio specified.

4. MIXING CONCRETE

4.1 Ready-Mixed Concrete: Ready-mixed concrete will be permitted provided it conforms to the "Standard Specification for Ready-Mixed Concrete", ASTM C94 and to the applicable portions of these Specifications.

4.2 Batch Mixing at Site:

4.2.1 The concrete shall be mixed in a batch mixer, conforming to the requirements of the Mixer Manufacturer's Bureau of the Associated General Contractors of America. The mixer shall bear a manufacturer's rating plate indicating the rated capacity and the recommended revolutions per minute and shall be operated in accordance with these recommendations. It shall be equipped with a suitable charging hopper, water storage tank, and a water-measuring device and shall be capable of thoroughly mixing aggregates, cement and water into a uniform mass within the specified mixing time and discharging the mix without segregation.

4.2.2 The batch shall be so charged into the mixer that some water will enter in advance of the cement and aggregates. Water shall continue to flow for a period which may extend to the end of the first 25 percent of the specified mixing time. Controls shall be provided to insure that the batch cannot be discharged until the required mixing time has elapsed. Controls shall be provided to insure that no additional water may be added during mixing. The entire batch shall be discharged before the mixer is recharged.

4.2.3 Each batch of two cubic yards or less shall be mixed for not less than 1½ minutes. The minimum mixing time shall be increased 15 seconds for each additional cubic yard or fraction thereof.

4.3 The mixer shall be clean, and the pick-up and throw-over blades shall be replaced when they have lost 10 percent of their original depth.

4.4 Admixtures:

4.4.1 Air-entraining and chemical admixtures and calcium chloride shall be charged into the mixer as a solution and shall be dispensed by an automatic dispenser or similar metering device. Powdered admixtures shall be weighted or measured but any admixture shall be within ± three percent.

4.4.2 Two or more admixtures may be used in the same concrete, provided such admixtures are added separately during the batching sequence and provided further that the admixtures used in that combination retain full efficiency and have no deleterious effect on the concrete or on the properties of each other.

4.4.3 Addition of retarding admixtures shall not be significantly delayed after the addition of the cement.

4.5 Retempering: Concrete shall be mixed only in quantities for immediate use. Concrete which has set shall not be retempered, but shall be discarded.

4.6 Indiscriminate addition of water to increase slump or workability shall be prohibited. When concrete arrives at the project with slump below that suitable for placing, water may be added only if neither the maximum permissible water-cement ratio nor the maximum slump is exceeded. The water must be incorporated by additional mixing equal to at least half of the total mixing required. Any addition of water above that permitted by the limitation on water-cement ratio must be accompanied by a quantity of cement sufficient to maintain the proper water-cement ratio.

4.7 Weather Conditions:

4.7.1 Cold Weather: To maintain the temperature of the concrete above the minimum placing temperature required herein, the as-mixed temperature shall not be less than 55°F when the mean temperature falls below 40°F.

4.7.2 If the water or aggregate has been heated, the water shall be combined with the aggregate in the mixer before cement is added. Cement shall not be added to the mixtures of water and aggregate when the temperature of the mixture is greater than 100°F.

4.7.3 Hot Weather: The ingredients shall be cooled before mixing if necessary to maintain the temperature of the concrete below the maximum placing temperature required herein.

5. CONCRETE PLACEMENT

5.1 Preparation Before Placing: Hardened concrete and foreign materials shall be removed from the inner surfaces of the conveying equipment.

5.2 Formwork shall be completed; reinforcement shall be secured in place; expansion joint material, waterstops, anchors, pipe sleeves, and other embedded items shall be positioned; and the entire

preparation shall be approved by the Owner before any concrete is placed. Subgrades shall be sprinkled sufficiently to eliminate absorption of water from the concrete before any concrete is placed.

5.3 Before placing concrete slabs on grade, where required, a polyethylene vapor barrier of 4 mil thickness, or approved equal, shall be installed in accordance with the manufacturer's recommendations. A layer of sand shall be placed on the granular fill to protect the vapor barrier during placement of concrete.

5.4 Conveying: Concrete shall be handled from the mixer to the place of final deposit as rapidly as practicable by methods which will prevent separation or loss of ingredients and in a manner which will assure that the required quality of the concrete is obtained.

5.5 Conveying equipment shall be of size and design to insure a continuous flow of concrete at the delivery end. Conveying equipment and operations shall conform to the following requirements:

5.5.1 Truck mixers, agitators, and nonagitating units and their manner of operation shall conform to the applicable requirements of "Specifications for Ready-Mixed Concrete", ASTM C94.

5.5.2 Belt conveyors shall be horizontal or at a slope which will not cause segregation or loss. An approved arrangement shall be used at the discharge end to prevent separation. Long runs shall be discharged without separation into a hopper.

5.5.3 Chutes shall be metal or metal-lined and shall have a slope not exceeding 1 vertical to 2 horizontal and not less than 1 vertical to 3 horizontal. Chutes more than 20 feet long and chutes not meeting the slope requirements may be used provided they discharge into a hopper before distribution.

5.5.4 Pumping or pneumatic conveying equipment shall be without "Y" sections, and with adequate pumping capacity. The equipment shall be cleaned at the end of each operation. Pneumatic placement shall be controlled so that separation is not apparent in the discharged concrete. The maximum loss of slump in pumping or pneumatic conveying equipment shall be 1½ inches.

5.6 Depositing: Concrete shall be deposited continuously or in layers of such thickness that no concrete will be deposited on concrete which has hardened sufficiently to cause the formation of seams or planes of weakness within the section. If a section cannot be placed continuously, construction joints shall be located at points as provided for in the drawings or as approved by the Owner. Placing shall be carried on at such a rate that the concrete which is being integrated with fresh concrete is still plastic. Concrete which has partially hardened or has been contaminated by foreign materials shall not be deposited. Temporary spreaders in forms shall be removed when the concrete placing has reached an elevation rendering their service unnecessary. They may remain embedded in the concrete only if made of metal or concrete and if prior approval has been obtained.

5.6.1 Placing of concrete in supported elements shall not be started until the concrete previously placed in columns and walls is no longer plastic.

5.6.2 Concrete shall be deposited as nearly as practicable in its final position to avoid segregation due to flowing or rehandling and shall drop vertically into the center of the forms. In no case shall concrete be allowed to fall more than five feet.

5.7 Where surface mortar is to be the basis of the finish, the coarse aggregate shall be worked back from the forms with a suitable tool so as to bring a full surface of mortar against the form without the formation of excessive surface voids. All concrete shall be consolidated by vibration, spading, rodding or forking so that the concrete is thoroughly worked around the reinforcement, around embedded items, and into corners of forms, eliminating all air or stone pockets which may cause honeycombing, pitting or planes of weakness. Mechanical vibrators shall have a minimum frequency of 7,000 revolutions per minute and shall be operated by competent workmen. Overvibrating and use of vibrators to transport concrete within forms shall not be allowed. Vibrators shall be inserted and withdrawn at many points, from 18 to 30

inches apart. At each insertion the duration shall be sufficient to consolidate the concrete but not sufficient to cause segregation, generally from 5 to 15 seconds duration. A spare vibrator shall be kept on the job site during all concrete placing operation.

5.8 Weather Conditions:

5.8.1 Unless adequate protection is provided, concrete shall not be placed in rain, sleet, or snow. Rain water shall not be allowed to increase the mixing water nor to damage the surface finish.

5.8.2 When the mean daily temperature falls below 40°F, the minimum temperature of concrete as place shall be 50°F.

5.8.3 Concrete deposited in hot weather shall have a placing temperature which will not cause difficulty from loss of slump, flash set or cold joints (usually somewhat less than 90°F).

5.9 Concreting Under Water: No concrete shall be placed under water without the approval of the Owner.

6. JOINTS

6.1 Construction Joints: Construction joints shown on the plans are recommended and any deviation from these shall be approved by the Owner. When joints not shown on the plans are required, they shall be placed so as to least impair the strength of the structure. Water stops shall be required at all construction joints.

6.1.1 All reinforcing bars and welded wire fabric shall continue across construction joints. Construction joints shall conform to the details shown on the plans and shall be keyed as shown. Construction joints shall be thoroughly wetted and coated with a mixture of 1:2 mortar immediately before the new concrete is placed.

6.1.2 The surface of the concrete at all joints shall be thoroughly cleaned and all laitance shall be removed. Immediately before placing fresh concrete, the surface of the existing concrete at the joint shall be dampened but not saturated. The edges of all joints which are exposed to view shall be carefully finished true to line and elevation.

6.2 Expansion Joints:

6.2.1 Reinforcement or other embedded metal items bonded to the concrete shall not be permitted to extend through any expansion joint.

6.2.2 Premolded expansion joint filler shall be of the size shown on the plans and shall conform to "Specifications for Preformed Expansion Joint Filler for Concrete (Standard Cork, Type II)", ASTM. The joint shall be sealed with two component non-staining gray sealing compound with polysulfide liquid polymers, gun grade with primer, installed in accordance with the manufacturer's recommendations.

6.3 Water Stops: Each piece of PVC Waterstop shall be of maximum practicable length in order that the number of splices be held to a minimum. Joints at intersections and at ends of pieces shall be made according to the manufacturer's recommendations and shall develop watertightness fully equal to that of the continuous waterstop material. Care shall be taken during installation of the waterstops so that no leakage will occur across the joint.

7. FINISHES

7.1 General: After removal of forms the concrete shall be given one or more of the finishes specified herein.

7.2 Formed Surfaces: All formed surfaces which are to be exposed to view shall be given a smooth rubbed

finish. The inside walls of structures, even though the structure will retain liquid, will be considered as exposed to view. All concrete surfaces not exposed to view may be left with a rough or board form finish.

7.3 All necessary patching shall have been done immediately after forms have been removed and rubbing shall be completed not later than the following day. Surfaces shall be wetted and rubbed with carborundum brick or other abrasive until a uniform color and texture are produced. Cement grout or slush may be used other than the cement paste drawn from the green concrete itself during the rubbing process.

7.4 Related Unformed Surfaces: Tops of walls and similar unformed surfaces occurring adjacent to formed surfaces shall be struck smooth after concrete is placed and shall be floated to a texture reasonably consistent with that of the formed surfaces. Final treatment on formed surfaces shall continue uniformly across the unformed surfaces.

7.5 Floor Finishes: Except as specified herein, all concrete floors shall be given a floated finish. After the concrete has been placed, struck off, consolidated and leveled, the concrete shall not be worked further until ready for floating. Floating shall begin when the water sheen has disappeared and/or when the mix has stiffened sufficiently to permit the proper operation of a power-driven float. The surface shall then be consolidated with power-driven floats. Hand floating which wood or cork-faced floats shall be used in locations inaccessible to the power-driven machine. Trueness of surface shall be rechecked at this stage with a 10-foot straightedge applied at not less than two different angles. All high spots shall be cut down and all low spots filled during this procedure to a tolerance of one-quarter inch in 10 feet as determined by a 10-foot straightedge placed anywhere on the slab in any direction.

7.6 Sidewalk slabs and other exterior slabs established for walking surfaces shall be given a coarse transverse scored texture by drawing a broom or burlap belt across the surface. This operation shall follow immediately after floating. Floating shall be performed as specified above.

7.7 Interior floor slabs of buildings shall be given a steel troweled finish. The surface shall be finished first with power floats, as specified above where applicable, then with power trowels, and finally with hand trowels. The first troweling after power floating shall be done by a power trowel and shall produce a smooth surface which is relatively free of defects but which may still contain some trowel marks. Additional trowelings shall be done by hand after the surface has hardened sufficiently. The final troweling shall be done when a ringing sound is produced as the trowel is moved over the surface. The surface shall be thoroughly consolidated by the hand troweling operations. The finished surface shall be free of any trowel marks, uniform in texture and appearance and shall be finished to a tolerance of one-eighth inch in 10 feet as determined by a 10-foot straightedge placed anywhere on the slab in any direction.

7.8 Interior floor slabs of buildings which are not to receive floor coverings shall be hardened after curing and drying with three coats of aqueous solution of magnesium fluosilicate and zinc fluosilicate, or approved equal, applied in accordance with the manufacturer's directions.

8. PATCHING

8.1 General: All tie holes and all repairable defective areas shall be patched immediately after form removal.

8.2 Defective Areas: All honeycombed and other defective concrete shall be removed down to sound concrete. The area to be patched and an area at least six inches wide surrounding it shall be dampened to prevent absorption of water from the patching mortar. A bonding grout shall be prepared using a mix of approximately one part cement to one part fine sand passing a No. 30 mesh sieve, shall be mixed to the consistency of thick cream and shall then be well brushed into the surface.

8.3 The patching mixture shall be made of the same material and of approximately the same proportions as used for the concrete, except that the coarse aggregate shall be omitted and the mortar shall consist of not

more than 1 part cement to 1½ parts sand by damp loose volume. White Portland cement shall be substituted for a part of the gray Portland cement on exposed concrete in order to produce a color matching the color of the surrounding concrete as determined by a trial patch.

8.4 The quantity of mixing water shall be no more than necessary for handling and placing. The patching mortar shall be mixed in advance and allowed to stand with frequent manipulation with a trowel without addition of water until it has reached the stiffest consistency that will permit placing.

8.5 After surface water has evaporated from the area to be patched, the bond coat shall be well brushed into the surface. When the bond coat begins to lose the water sheen, the premixed patching mortar shall be applied. The mortar shall be thoroughly consolidated into place and struck off so as to leave the patch slightly higher than the surrounding surface. To permit initial shrinkage, it shall be left undisturbed for a least one hour before being finally finished. The patched area shall be kept damp for seven days. Metal tools shall not be used in finishing a patch in a formed wall which will be exposed.

8.6 Tie Holes: After being cleaned and thoroughly dampened, the tie holes shall be filled solid with patching mortar.

8.7 Proprietary Materials: If desired by the Contractor, proprietary compound for adhesion or as patching ingredients may be used in lieu of or in addition to the foregoing patching procedures. Such compounds shall be used in accordance with the manufacturer's recommendations and shall be Standard Dry Wall products, or approved equal.

9. CURING AND PROTECTION

9.1 General: Exposed surfaces of concrete shall be protected from premature drying and excessively hot or cold temperatures for the period of time necessary for the hydration of the cement and proper hardening of the concrete.

9.2 Curing: Initial curing shall immediately follow the finishing operation. Concrete shall be kept continuously moist at least for 24 hours by one of the following materials or methods:

9.2.1 Ponding or continuously sprinkling.

9.2.2 Absorptive mat or fabric kept continuously wet.

9.2.3 Sand or other covering kept continuously wet.

9.3 Immediately following the initial curing and before the concrete has dried, final curing shall be accomplished by one of the following materials or methods:

9.3.1 Continuation of method used for initial curing.

9.3.2 Waterproof paper conforming to "Specifications for Waterproof Paper for Curing Concrete", ASTM C171.

9.3.3 Other moisture retaining coverings as approved by the Owner.

9.4 The final curing shall continue for a cumulative number of seven days, not necessarily consecutive, during which the temperature of air in contact with the concrete is above 50°F. If high-early-strength cement has been used, the final curing shall continue for a total of three days. When the mean daily temperature of the atmosphere is less than 40°F,, the temperature of the concrete shall be maintained between 50°F and 70°F for the required curing period. When necessary, arrangements for heating, covering, insulating or housing the concrete work shall be made in advance of placement and shall be adequate to maintain the required temperature and moisture conditions without injury due to concentration of heat or carbon dioxide build up.

9.5 During hot weather, arrangements for installation of windbreaks, shading, spraying, sprinkling, ponding or wet covering shall be made in advance of placement and such protective measures shall be taken as quickly as concrete hardening and finishing operations will allow.

9.6 Changes in temperature of the concrete shall be as uniform as possible and shall not exceed 5°F in any one hour or 50°F in any 24-hour period.

9.7 Protection From Mechanical Injury: During curing the concrete shall be protected from damaging mechanical disturbance, heavy shock or excessive vibration. All finished surfaces shall be protected from damage caused by construction equipment, materials, or methods, and rain or running water.

9.8 Temperature & Shrinkage Cracks: Temperature and shrinkage cracks which develop prior to the final acceptance of the structure by the Owner shall be repaired and waterproofed as specified herein and other applicable parts of the Specifications.

10. TESTING

10.1 General: The Contractor shall keep a log identifying the exact locations of poured concrete represented by each test cylinder and shall furnish two copies of the test reports and logs to the Owner as they become available.

10.2 All strength tests shall be performed by a reputable testing laboratory hired by the Contractor at his expense. The costs of performing all strength tests as specified herein shall be borne by the Contractor and no extra compensation will be allowed.

10.3 Slump Tests: Slump tests will be routinely performed, and shall conform to "Standard Method of Test for Slump of Portland Cement Concrete", ASTM C143.

10.4 Strength Tests: Test cylinders shall be taken by the Contractor and shall be cured and tested in accordance with the "Standard Method of Making and Curing Concrete Compressive and Flexural Strength Test Specimens in the Field", ASTM C31. Not less than three specimens shall be made for each 20 cubic yards of concrete or fraction thereof in each day's pour, except that in no case shall a given mix design be represented by less than five tests. The standard age of test shall be 28 days, but 7-days tests and 14-day tests may be used provided that the relation between the 7-day, 14-day and 28-day strengths of the concrete is established in advance by test for the materials and proportions used. If the Contractor desires, extra cylinders may be made and tested for the purpose of indicating sufficient concrete strength for form removal or other purposes. If the average of the strengths of the test cylinders fail to obtain the specified strength so as to justify doubt as to the quality of the concrete, further tests shall be made at the Contractor's expense, of the concrete in place to determine its fitness to remain in the structure. These tests shall be performed in accordance with the "Standard Method of Obtaining and Testing Drilled Cores and Sawed Beams of Concrete", ASTM C42. The strength level of the concrete will be considered acceptable if the average of three, 28-day test strength results equal or exceed the specified compressive strength and no individual tests fall below the specified compressive strength by more than 200 psi.

10.5 Air Content Tests: Air content tests may be requested by the Owner at his discretion and shall conform to the "Standard Method of Test for Air Content of Freshly Mixed Concrete by the Volumetric Method", ASTM C173 or the "Standard Method of Test for Air Content of Freshly Mixed Concrete by the Pressure Method", ASTM C231. The Contractor shall provide all necessary equipment, materials, sampling, and testing.

11. GROUT

11.1 General: This item includes furnishing, placing and finishing the grout for the manhole covers and other locations as required.

11.2 Materials: Materials are specified herein.

11.3 Proportioning & Mixing: Grout shall consist of a mixture of 1 part Portland cement and 2 parts fine aggregate with a slump of three inches to five inches. The water-cement ratio shall be maintained at not more than 4½ gallons per bag of cement. The ingredients shall be mixed in accordance with the applicable portions of this Specification so as to produce a uniform mass of material.

11.4 Placing: Before placing grout, the concrete shall be thoroughly cleaned of all dust, dirt or other deleterious material and then shall be thoroughly wetted. Grout shall be placed in one continuous operation to the thickness shown on the plans with no construction joints allowed.

11.5 After the grout is placed, it shall be given a floated finish as specified in this Specification and shall be cured as specified under Section 9 of this Specification.

12. CONCRETE CURB AND GUTTER

12.1 Concrete shall be poured on a base of aggregate, contiguous with the base for street paving. Forms shall be metal or sound, dressed lumber, straight, free from warp, of sufficient strength to resist springing during construction, and of a height equal to the full depth of the item to be constructed. The forms shall be thoroughly cleaned, well oiled, securely staked, braced, and held to the required line and grade. A template shall be used to achieve the proper curb and gutter cross section.

12.1.1 In lieu of the forming requirements specified in Paragraph 12.1, slip form methods may be used for placement of concrete curb, concrete gutter, curb and gutter, and paved ditch providing proper lines, grades, and typical sections are maintained.

12.2 Required reinforcement and tie bars shall be held in the designated position during the placing of concrete by bar chairs or other approved devices. Joints shall be constructed at intervals and locations shown on the plans or as directed by the Engineer.

12.3 Concrete shall be placed on the prepared and sprinkled subgrade, compacted and struck off to the required thickness. Concrete shall be tamped or vibrated sufficiently to eliminate all voids and to bring mortar to the top, after which the surface shall be finished smooth and even. All edges shall be rounded with an edging tool. Faces of curbs shall be rounded at the top and bottom, by means of an approved tool, to the radius shown. All concrete will be given a light broom finish and shall be sprayed with a liquid membrane-forming compound or as specified by the Engineer.

12.4 After the concrete has set sufficiently, the forms shall be removed, and where necessary, the contractor shall backfill adjacent to the concrete with suitable material, compacted and finished in a satisfactory manner.

12.5 Crack Control Joints: When the concrete curb and gutter has cured sufficiently to allow saw cuts to be made without raveling, the contractor shall saw crack control joints. These shall be cut at intervals at 20 feet, or as directed by the Engineer. Sawing of the joints shall be considered as a part of the curb and gutter construction with no extra compensation provided. All sawed joints shall be filled with an approved joint filler material.

13. SIDEWALKS

13.1 Description: Concrete sidewalks shall be constructed to the line, grade and dimensions shown on the plans or as established by the Engineer. Unless otherwise specifically designated, concrete sidewalks shall have a width of four (4) feet and a depth of four (4) inches, except that at driveways or other points designated on the plans, the depth shall be increased to seven (7) inches.

13.2 Construction:

13.2.1 Subgrade. Concrete sidewalks shall be constructed on a prepared smooth subgrade of uniform density. Large boulders and ledge rock found in the subgrade shall be removed to a minimum depth of six (6) inches below the finished subgrade elevation and the space shall be backfilled with suitable material which shall be thoroughly compacted by rolling or tamping. The Contractor shall furnish a template and shall thoroughly check the subgrade prior to depositing concrete.

13.2.2. Forms. The forms shall be of either metal or wood and shall be straight, free from warp, of sufficient strength to resist springing during construction, and of a height equal to the full depth of the sidewalk to be constructed. Wood forms shall have a minimum thickness of two (2) inches. Metal forms shall be of a type approved by the Engineer. Flexible or curved forms of proper radius shall be furnished on curves. The forms shall be thoroughly cleaned, well oiled, securely staked, braced, and held to the required line and grade before any concrete is deposited.

13.3 Depositing Concrete: The concrete shall be deposited between the forms on moistened subgrade and shall be struck off and compacted to the required thickness. Concrete may be compacted by internal vibrating equipment, spading, rodding or tamping or as directed by the Engineer.

13.4 Joints: Dummy joints, spaced approximately at five (5) feet intervals, shall be provided for the full width (and length for wider sidewalks) to a depth of one (1) to two (2) inches. The joint may be made by a suitable tooling device or by tamping tapered metal or wooden strips into the plastic concrete, which strips shall be removed after the concrete has partially set. As an alternate method the dummy joint may be made by sawing the concrete after initial set and before shrinkage cracks occur.

Premolded expansion joint material, one-half (1/2) inch thick, shall be installed in the sidewalk for its full depth wherever it meets another sidewalk, driveway, building, curb, lighting standard, fireplug, or other rigid object. Expansion joints shall be placed on all four (4) sides of the square formed by the intersection of two (2) sidewalks. When the sidewalk fills the space between the curb and a building or wall, and expansion joint shall be placed between the sidewalk and the curb and between the sidewalk and the building or wall.

13.5 Finishing: After the concrete has been brought true to line and grade, it shall be finished to a medium rough finish by use of a still broom or other approved method to produce and even, gritty texture. All edges shall be rounded with and edging tool to one-fourth (1/4) inch radius.

13.6 Backfilling: After the concrete has sufficiently set, the form shall be removed and the space on each side of the walk shall be backfilled. The earth shall be compacted and graded in a manner satisfactory to the Engineer.

1. GENERAL:

1.1 The work specified in this section shall include the furnishing, hauling, and placing of all precast manholes and catch basins shown on the drawings and as specified herein. Precast catch basins may be used in lieu of the cast-in-place concrete catch basins shown on the drawings with written approval by the Engineer.

2. MATERIALS:

2.1 Reinforcing and concrete in pipe barrels shall meet the requirements of ASTM C-76. Precast manholes shall meet the requirements of ASTM C478-67T and these subsequent specifications.

2.2 Precast reinforced concrete manholes and catch basins shall have the same basic dimensions as shown on the detailed drawings, for all types.

2.3 The precast reinforced concrete manholes shall be of the type and configuration shown on the drawings, and all manhole units shall be provided by one sole manufacturer. Precast top sections shall be the eccentric cone type. Flat tops for shallow manholes shall be cast as depicted on the drawings.

2.4 Where precast sections are jointed together, an approved mastic sealant or rubber gasket shall be utilized on the contact area of the sections to establish an effective watertight joint. This shall be in addition to any concrete grouting or other methods employed in making the joint.

2.5 Cement used in the construction of precast reinforced concrete manholes and catch basins shall conform to the requirements of the Standard Specifications for Portland cement, ASTM Designation C150-67 Type I or V.

2.6 Precast reinforced concrete manholes shall have the same basic dimensions as shown on the drawings.

2.6.1 Minimum internal shell diameter shall be 4 feet and additional wall thickness may be required when other than normal load conditions are found to exist.

2.7 Mastic Joint Materials: Sealant materials shall meet or exceed Federal Specifications SS-5-00210(210-A) and AASHTO M-198, and shall be suitable for application in vertical and horizontal joints. Sealant shall be as manufactured by Hamilton-Kent, Ram-Nek, or equal.

2.8 Manholes:

2.8.1 Manholes shall have 48-inch diameter riser sections.

2.8.2 The base shall be constructed of 3500 psi concrete with a maximum slump of 4 inches and shall be vibrated in place. The bottom of the precast manhole shall be set a minimum of 12 inches into the cast-in-place concrete manhole base. The base shall extend 18 inches minimum outside of manhole and be reinforced with No. 4 bars, spaced at 12 inches on center each way.

2.8.3 The base and invert shall be of the same basic design as shown on the construction drawings.

2.8.4 Precast bottoms for manholes may be used upon written approval by the Engineer.

2.9 Manhole Frame & Cover, Curb Inlet & Catch Basin Grate Castings:

2.9.1 General Requirements: All castings shall be made of clean, even grain, tough, gray cast iron. The casting shall be smooth, true to pattern, and free from projections, sand holes, warp and other defects which would interfere with the use of, or impair the serviceability of the casting. All castings shall be well cleaned before enamel coating is applied.

2.9.2 The iron used for these castings shall conform to the specifications of the ASTM Designation A48-74 for Class 30 gray iron. The "B" test bar (1.2" diameter x 21" long) shall be used to prove the quality of iron used.

2.9.3 The manhole casting shall consist of a frame and solid cover conforming to the detailed plans. The frames and cover shall weigh not less than 415 pounds.

2.9.4 Manhole frame and lid units shall conform to weights, dimensions, and tolerances of Neenah Foundry No. R-1769-A, or equal.

2.9.5 Waterproof Manhole Frames & bolted Lids: Units shall conform to dimensions, tolerances, and specifications of Neenah Foundry No. R-1916-F, with four (4) stainless steel lid bolts, and four (4) carbon steel anchor bolts.

2.9.6 Curb inlet castings shall conform to dimensions, tolerances, and specifications of Neenah Foundry No. R-3335-1 or as shown on the drawings. Unit shall weigh not less than 425 pounds. Similar units as manufactured by Deeter or others may be offered as alternates.

2.9.7 Catch basin gratings shall conform to dimensions, weight, tolerances and shall have bars transverse to the direction of traffic, slanted to conduct water into the catch basin according to Neenah Foundry No. R-4826. Grating shall be furnished with a Neenah Foundry No. R-4899 angle frame. Similar units as manufactured by Deeter Foundries or others may be offered as alternates.

2.10 Manhole Steps: Dimensions, weights, tolerances and specifications shall conform to Neenah No. R-1981-N or approved equal.

2.11 Mortar:

2.11.1 The mortar shall be composed by volume of one (1) part Portland Cement, Type I conforming to ASTM C150-68 cement and three (3) parts aggregate and shall conform to Type M, Mortar, ASTM Designation C270-64T, or the latest revision thereof, and as specified hereinafter. The mortar shall have a minimum compressive strength of 2800 psi in 28 days. The aggregate shall be free from all organic and any other deleterious matter and shall conform to ASTM Designation C33-67 and shall have a sieve analysis within the following limits:

Sieve	Percent Passing
3/8"	100
No. 4	95 to 100
No. 8	80 to 100
No. 16	50 to 85
No. 30	25 to 60
No. 50	10 to 30
No. 100	2 to 10

2.11.2 The method of measuring materials shall be such that the specified proportions of the mortar materials can be controlled and accurately maintained.

2.11.3 All materials for the mortar shall be mixed for at least three (3) minutes with the maximum amount of water to produce a workable consistency in a mechanical batch mixer.

2.11.4 Mortars that have stiffened because of evaporation of water from the mortar shall be retempered by adding water as frequently as needed to restore the required consistency. Mortars shall be used and placed in final position within 2½ hours after mixing.

3 EXECUTION

3.11 Precast Manhole Installations For All Types:

3.11.1 Size and Location: Manholes shall be constructed at locations and to dimensions indicated on the drawings.

3.11.2 Joints: The joints in the manholes shall be set in a bitumastic material or utilize an O-ring gasket to produce a weathertight joint.

3.11.3 Pipe Connections: Inlet and outlet pipes shall extend through the walls of the structures a sufficient distance beyond the outside surface to allow for connections, and shall extend beyond the inside surface of the wall. Non-shrinking grout shall be so placed around the pipes to provide full continuous contact between the wall and the outside of the pipe to prevent leakage and to form a neat connection.

3.11.4 Inverts: Invert channels shall be smooth and semi-circular in shape conforming to the inside of the adjacent sewer line sections with changes in flow direction made by a smooth curve of as large a radius as the manhole size will permit, and changes in the size and grade of the channels being made gradually and evenly. Precast manhole bases with integral inverts are not acceptable.

3.11.5 Lifting Holes: All lifting holes shall be thoroughly wetted and completely filled with non-shrinking grout to form a watertight seal.

3.11.6 Castings: All castings, frames and covers shall be set true to line and to correct elevation upon a full bed or mortar. The unit shall not be disturbed until the mortar or concrete has hardened to adequate strength. Frames and covers shall have true common bearing surfaces, such that the covers will seat firmly without rocking or shifting. The covers shall be placed after the frames have been installed and after the mortar has been allowed to harden for at least 24 hours.

4 MEAUREMENT AND PAYMENT:

4.11 Measurement:

4.11.1 Standard Precast Manholes shall be measured as a complete, in-place unit per manhole.

4.11.2 Precast or Cast-In-Place Catch or Inlet Basins shall be measured as a complete in-place unit per detail designation.

4.2 Payment:

4.2.1 Standard manholes shall be paid for at the unit price stated in the Bid Schedule for each standard type manhole unit. Price shall constitute full compensation for precast concrete sections, lid and frame, steps, sealants, concrete, reinforcement, excavation, backfill, labor, equipment, and supervision, for a complete in-place unit.

4.2.2 Precast or Cast-In-Place Catch Basins shall be paid for at the unit price stated in the Bid Schedule for the detail designation type. Payment shall constitute full compensation for precast or cast-in-place sections, grating or curb inlet and frame, sealants, concrete, reinforcement, excavation, backfill, labor, equipment and supervision for a complete unit.

SAI

Sprenkle & Associates, Inc.
Consulting Engineers & Land Surveyors

ROADWAY-TYPICAL SECTION

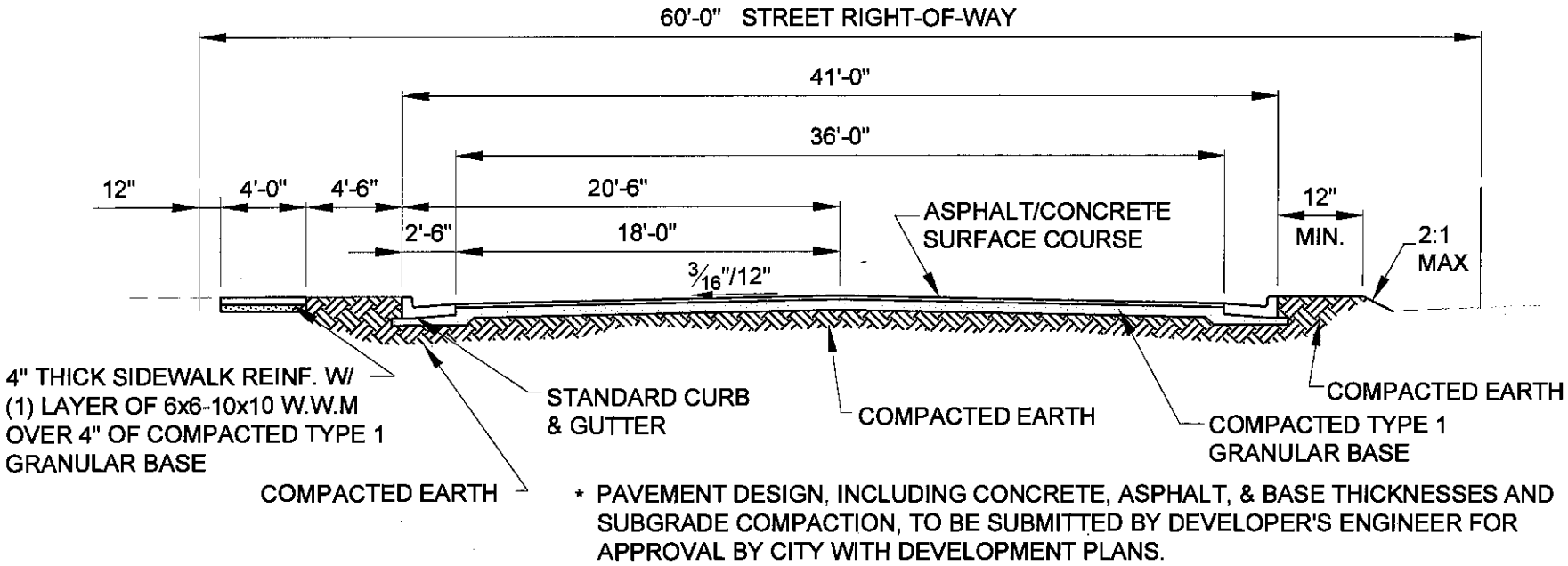

* PAVEMENT DESIGN, INCLUDING CONCRETE, ASPHALT, & BASE THICKNESSES AND SUBGRADE COMPACTION, TO BE SUBMITTED BY DEVELOPER'S ENGINEER FOR APPROVAL BY CITY WITH DEVELOPMENT PLANS.

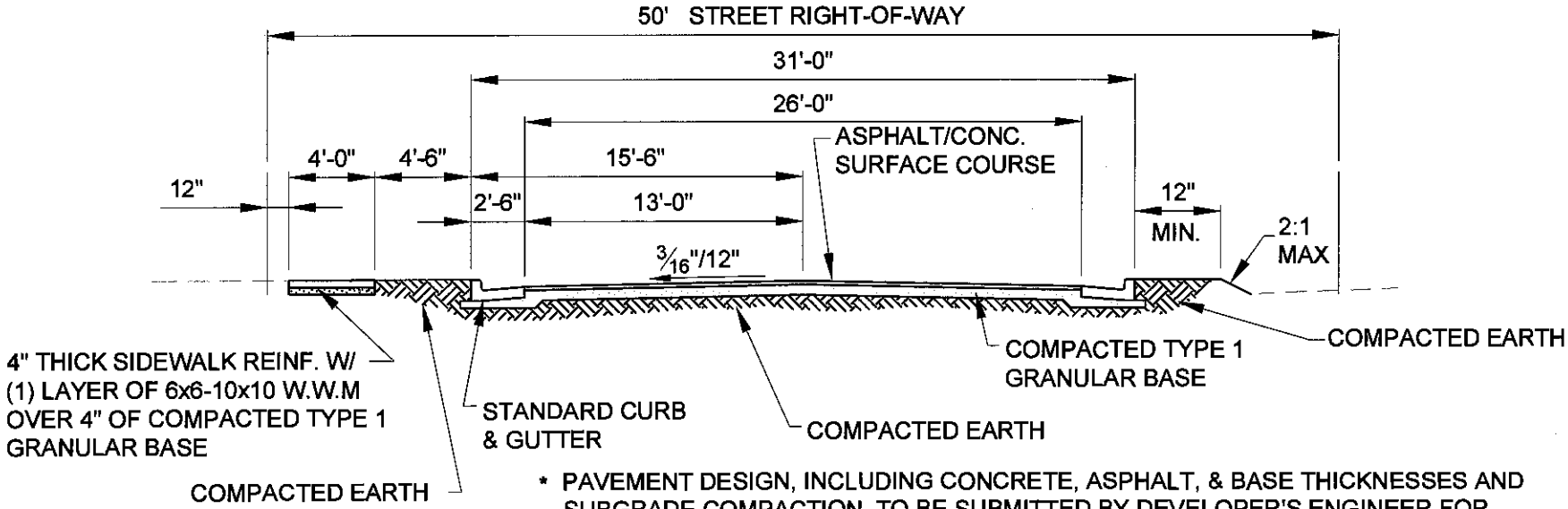

* PAVEMENT DESIGN, INCLUDING CONCRETE, ASPHALT, & BASE THICKNESSES AND SUBGRADE COMPACTION, TO BE SUBMITTED BY DEVELOPER'S ENGINEER FOR APPROVAL BY CITY WITH DEVELOPMENT PLANS.

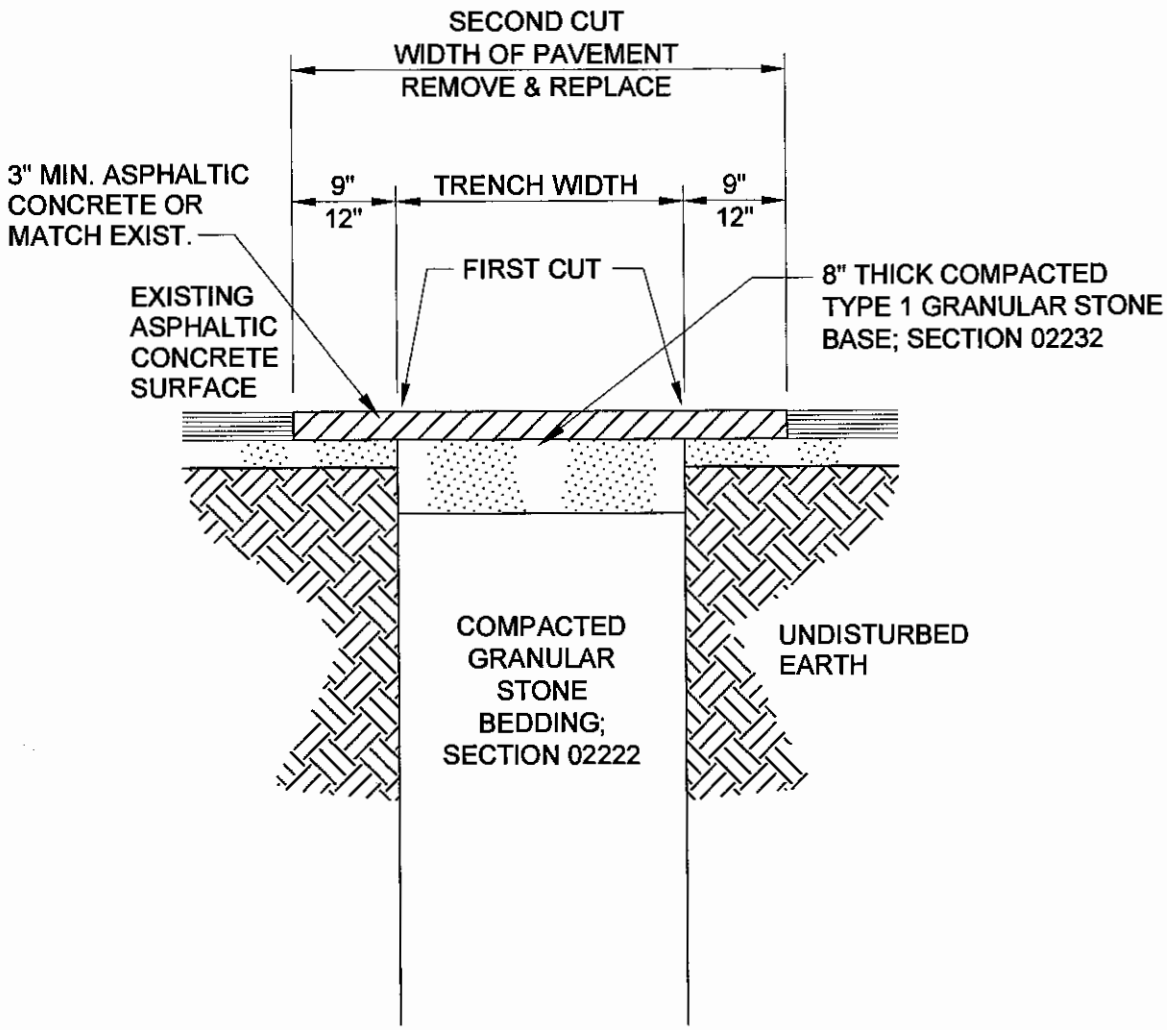

GRANULAR STONE BEDDING: SECTION 02222

SIEVE SIZE	PERCENT PASSING
1	100
3/4	90-100
3/8	20-55
No. 4	0-10
No. 8	0-5

TYPE 1 GRANULAR STONE BASE: SECTION 02232

SIEVE SIZE	PERCENT PASSING
1	100
1/2	60-90
No. 4	35-60
No. 40	10-35

SAI	*Sprenkle & Associates, Inc.* *Consulting Engineers & Land Surveyors*	PAVEMENT REPAIR ASPHALTIC CONCRETE

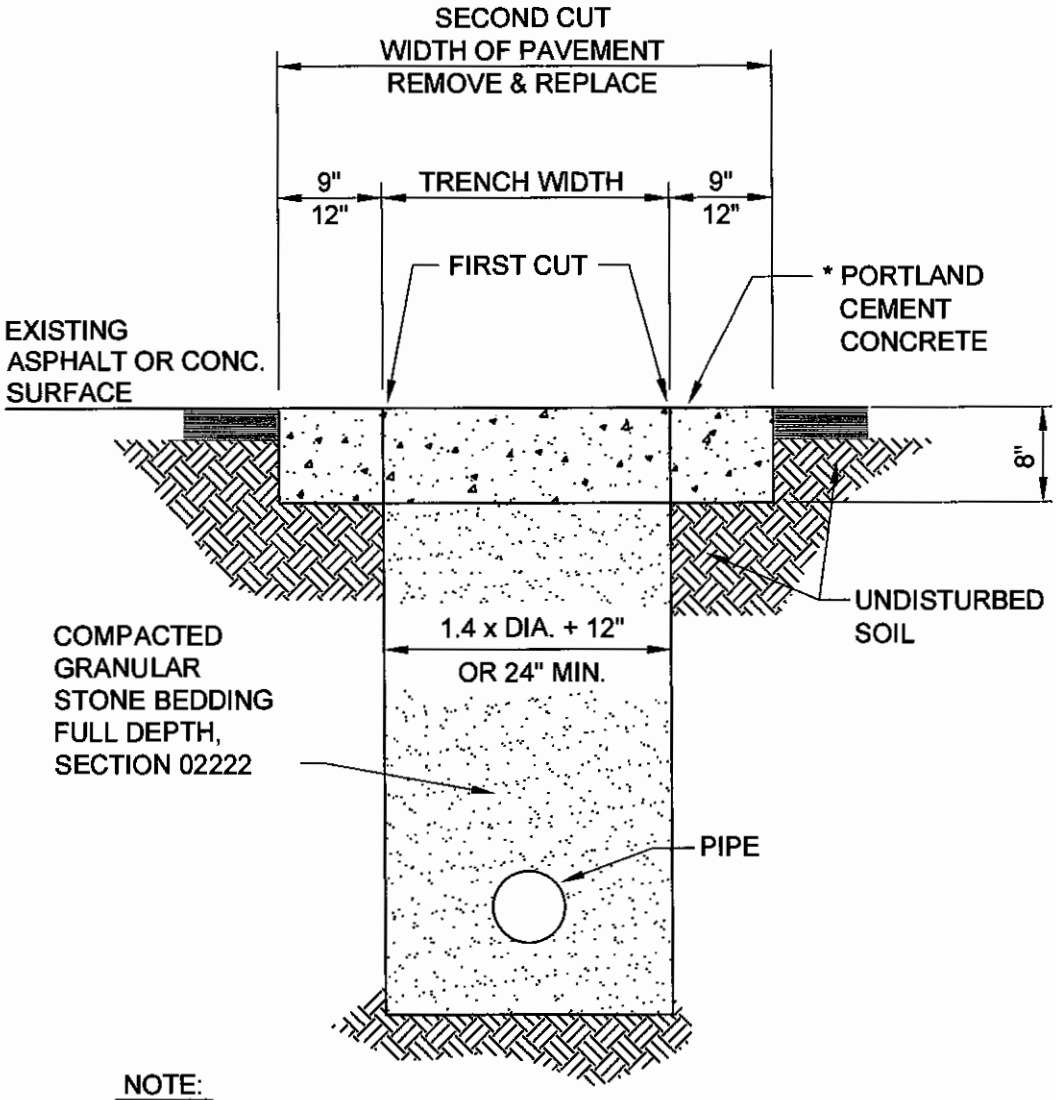

NOTE:
FIRST & SECOND CUTS OF EXISTING PAVEMENT SHALL BE SAW CUT FULL DEPTH.

* FOR SIDEWALK REPAIR, CONCRETE SHALL BE 4" THICK.

GRANULAR STONE BEDDING: SECTION 02222

SIEVE SIZE	PERCENT PASSING
1	100
3/4	90-100
3/8	20-55
No. 4	0-10
No. 8	0-5

SAI	*Sprenkle & Associates, Inc.* *Consulting Engineers & Land Surveyors*	PAVEMENT REPAIR PORTLAND CEMENT CONCRETE

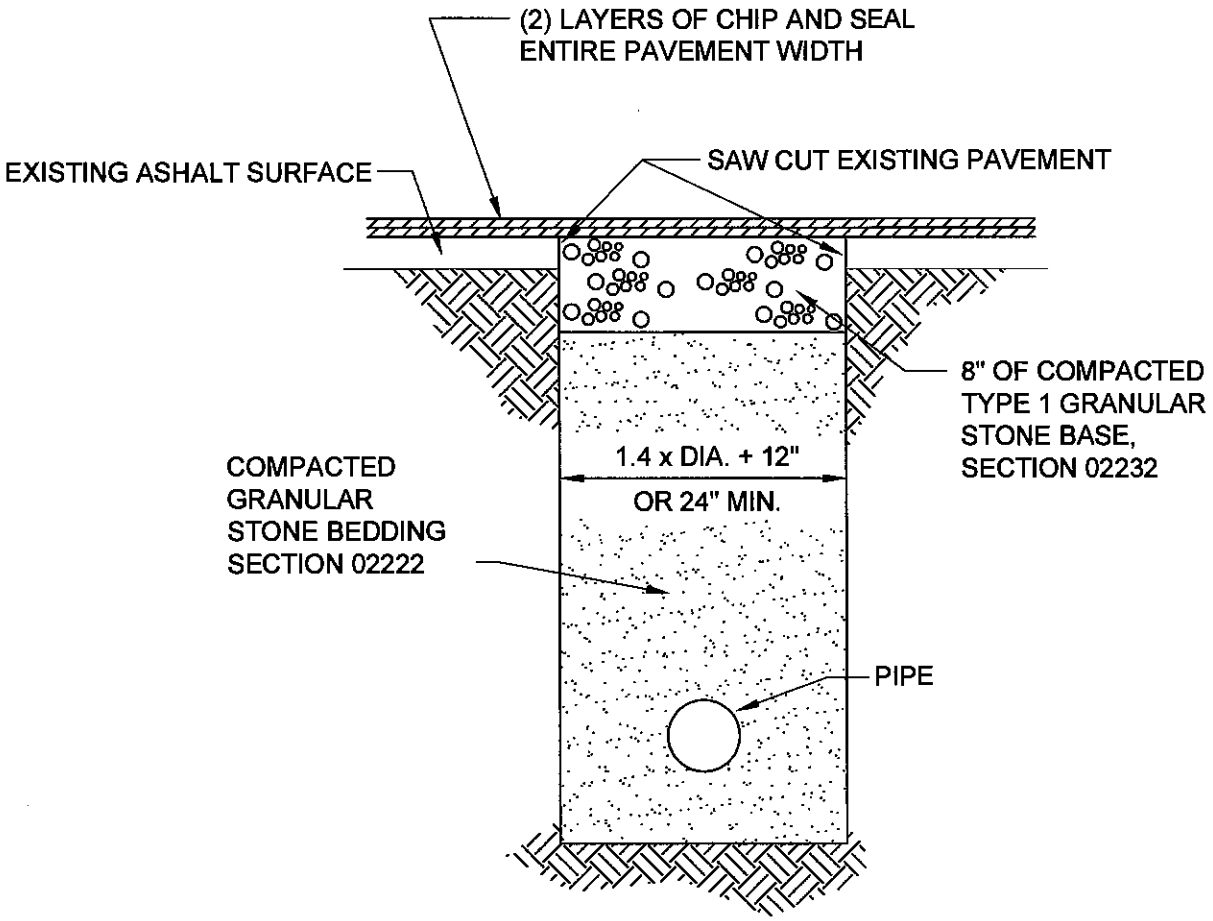

GRANULAR STONE BEDDING: SECTION 02222

SIEVE SIZE	PERCENT PASSING
1	100
3/4	90-100
3/8	20-55
No. 4	0-10
No. 8	0-5

TYPE 1 GRANULAR STONE BASE: SECTION 02232

SIEVE SIZE	PERCENT PASSING
1	100
1/2	60-90
No. 4	35-60
No. 40	10-35

SAI

Sprenkle & Associates, Inc.
Consulting Engineers & Land Surveyors

PAVEMENT REPAIR
CHIP & SEAL

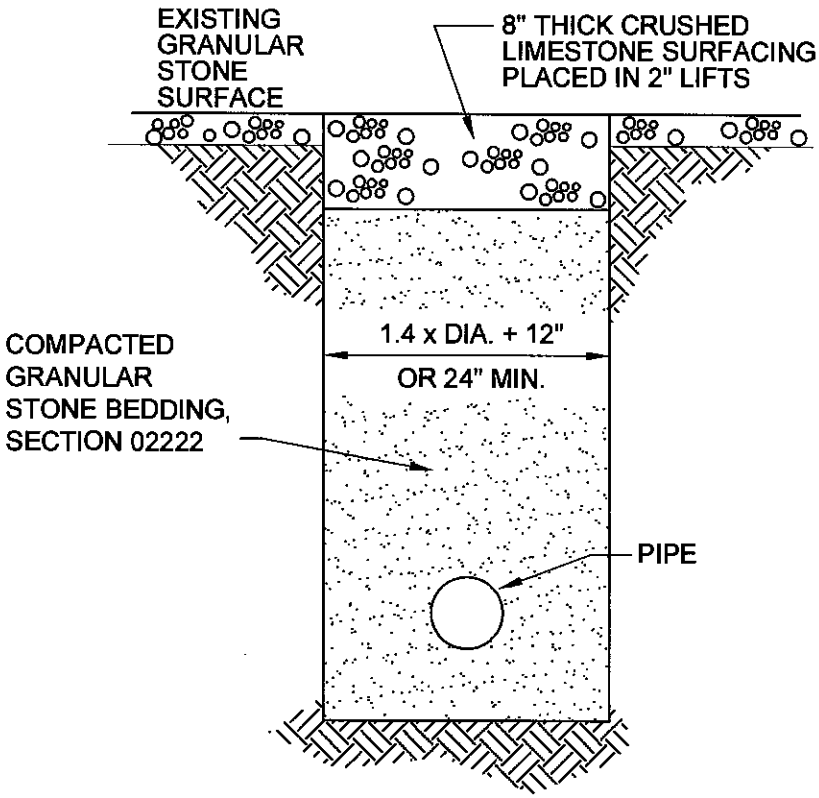

GRANULAR STONE BEDDING: SECTION 02222

SIEVE SIZE	PERCENT PASSING
1	100
3/4	90-100
3/8	20-55
No. 4	0-10
No. 8	0-5

SAI	*Sprenkle & Associates, Inc.* *Consulting Engineers & Land Surveyors*	PAVEMENT REPAIR CRUSHED STONE

NOTE: TRENCH SHALL BE EXCAVATED TO PROVIDE VERTICAL WALLS.

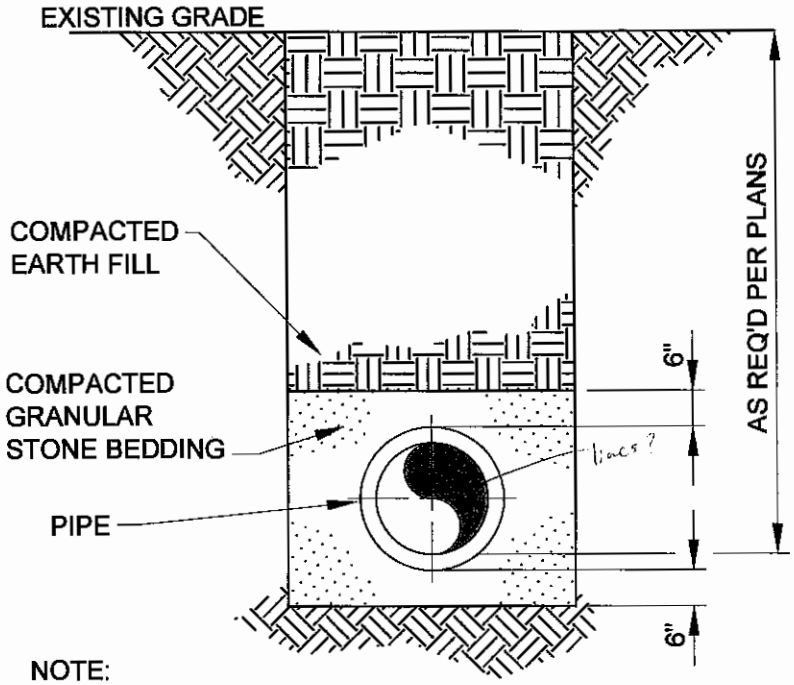

NOTE:
TRENCH SHALL BE EXCAVATED TO A DEPTH OF 6" BELOW BOTTOM OF PIPE AND BACKFILLED TO 6" ABOVE PIPE WITH GRAVEL OR CRUSHED STONE CONFORMING TO THE FOLLOWING GRADATION TO PROVIDE UNIFORM BEDDING FOR THE ENTIRE LENGTH OF THE PIPE.

GRANULAR STONE BEDDING: SECTION 02222

SIEVE SIZE	PERCENT PASSING
1	100
3/4	90-100
3/8	20-55
No. 4	0-10
No. 8	0-5

SAI	*Sprenkle & Associates, Inc.* *Consulting Engineers & Land Surveyors*	STANDARD TRENCH & BEDDING DETAIL

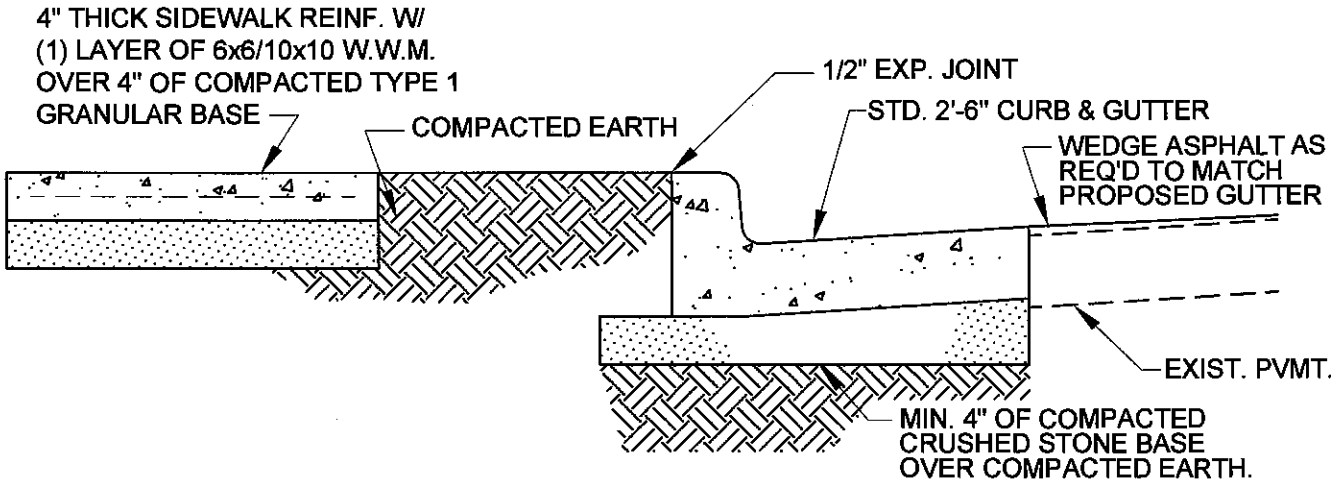

SIDEWALK SHALL HAVE CRACK CONTROL JOINTS AND EXPANSION JOINTS AT LOCATIONS INDICATED ON PLANS AND SHALL BE BUILT IN ACCORDANCE WITH SECTION 03300 OF STANDARD SPECIFICATIONS.

SAI	*Sprenkle & Associates, Inc.* *Consulting Engineers & Land Surveyors*	SIDEWALK INSTALLATION DETAIL

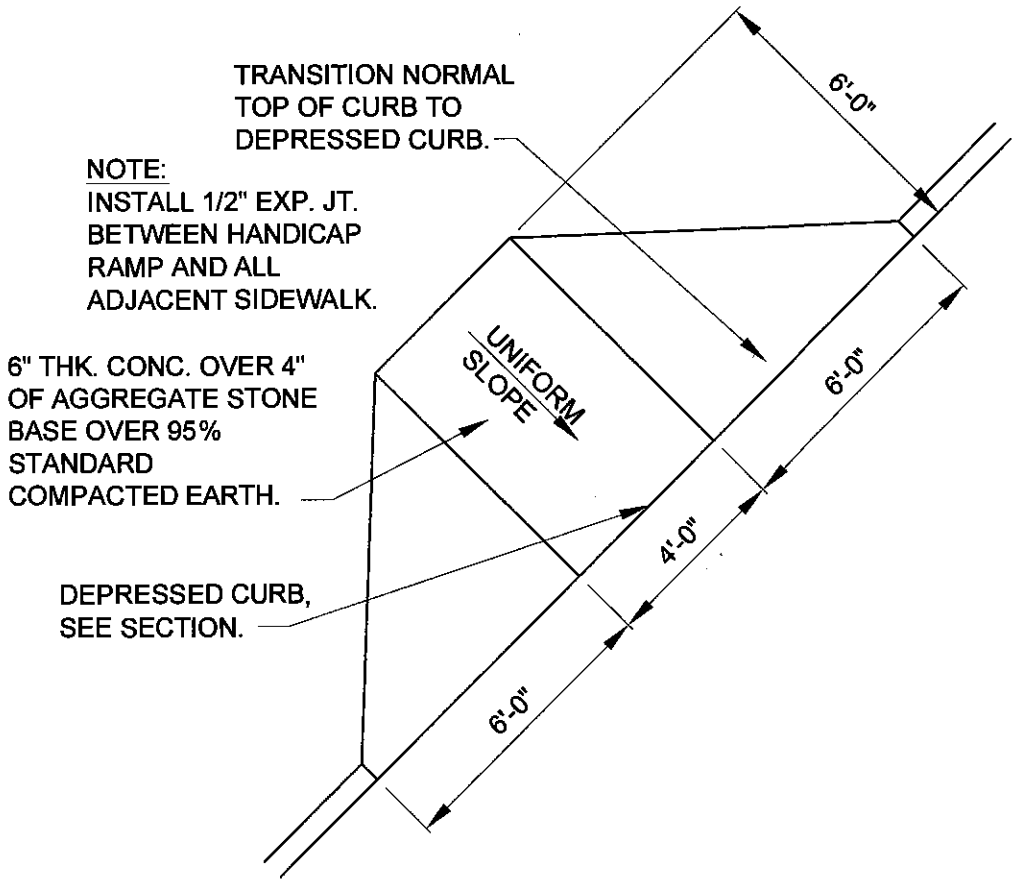

PLAN

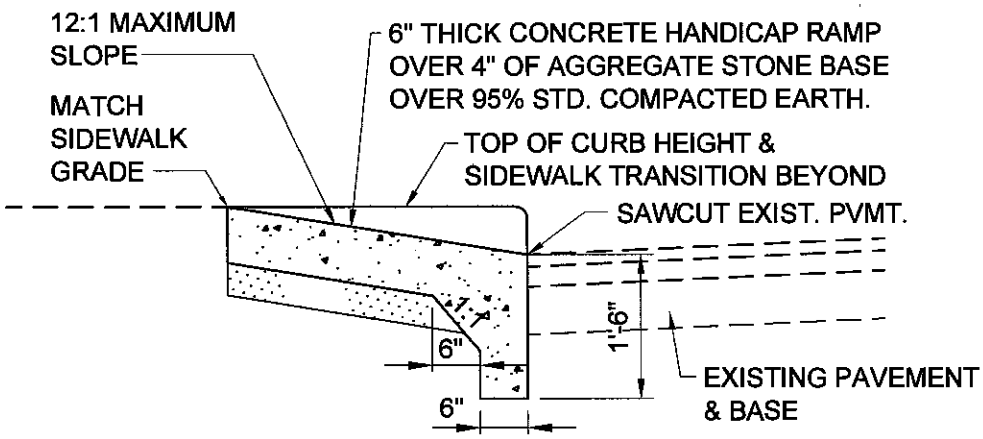

SECTION W/ TURN-DOWN

SAI	*Sprenkle & Associates, Inc.* *Consulting Engineers & Land Surveyors*	HANDICAP RAMP INSTALLATION DETAIL 1

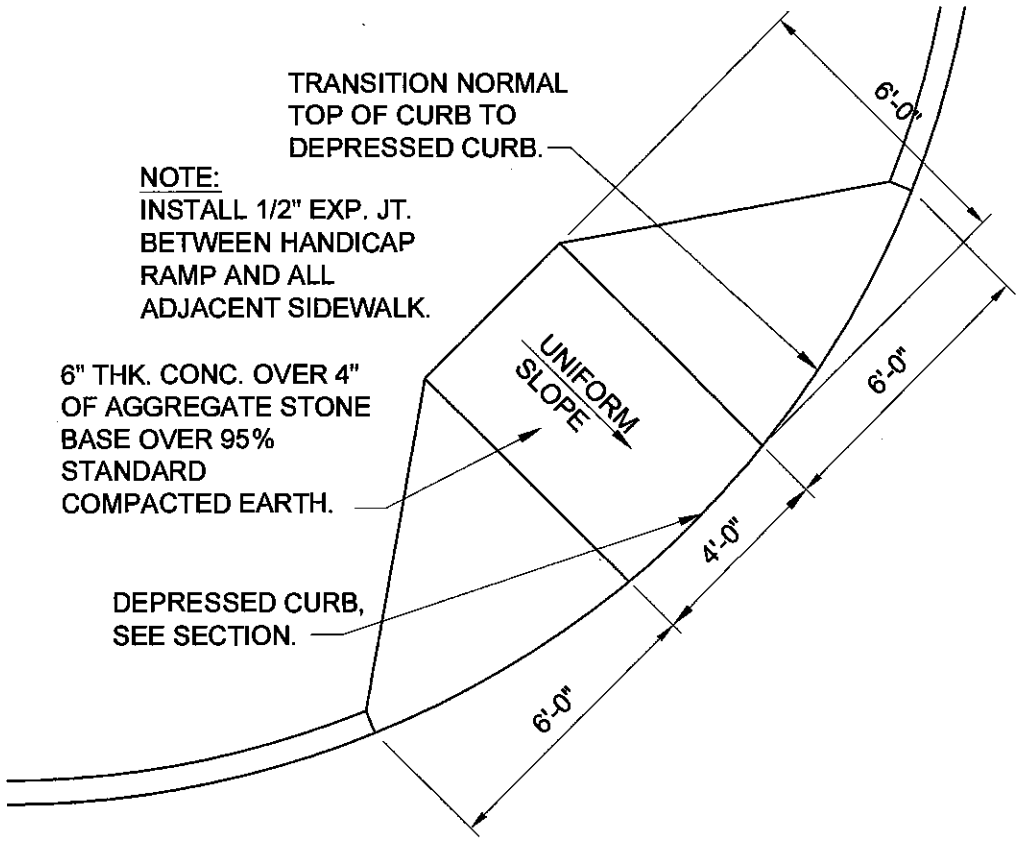

PLAN

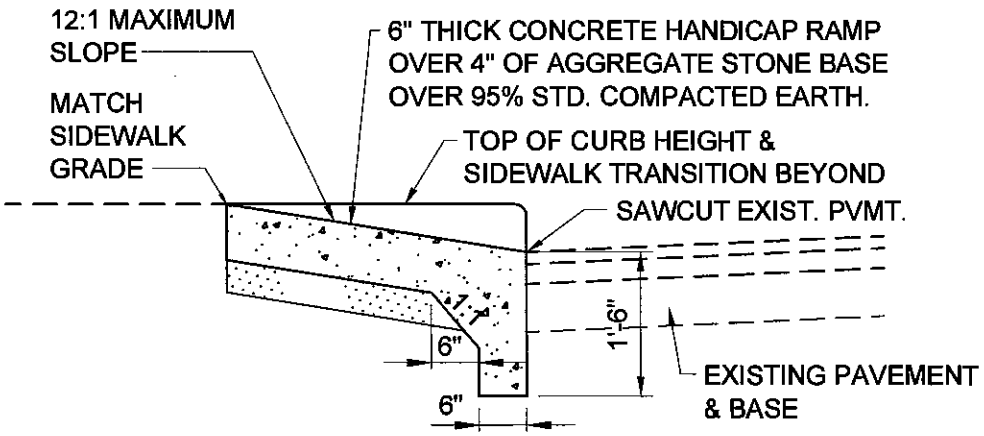

SECTION W/ TURN-DOWN

SAI	*Sprenkle & Associates, Inc.* *Consulting Engineers & Land Surveyors*	HANDICAP RAMP INSTALLATION DETAIL 2

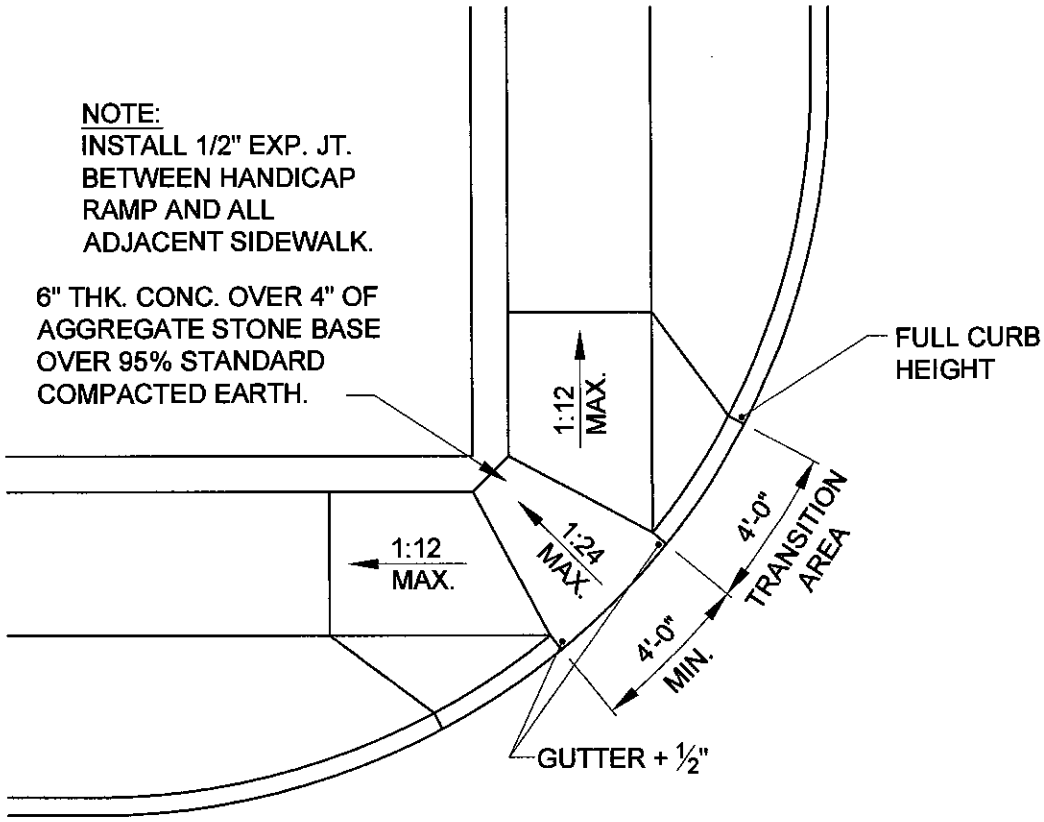

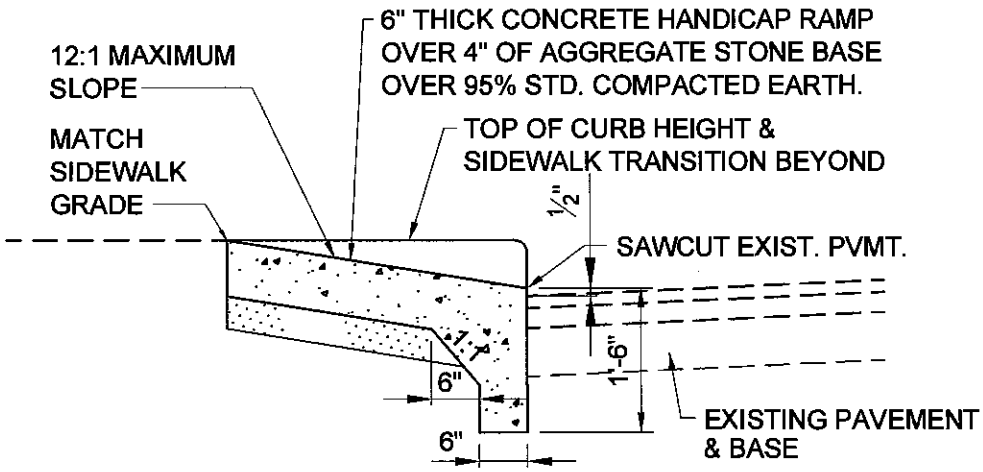

SECTION W/ TURN-DOWN

SAI	*Sprenkle & Associates, Inc.* *Consulting Engineers & Land Surveyors*	HANDICAP RAMP INSTALLATION DETAIL 3

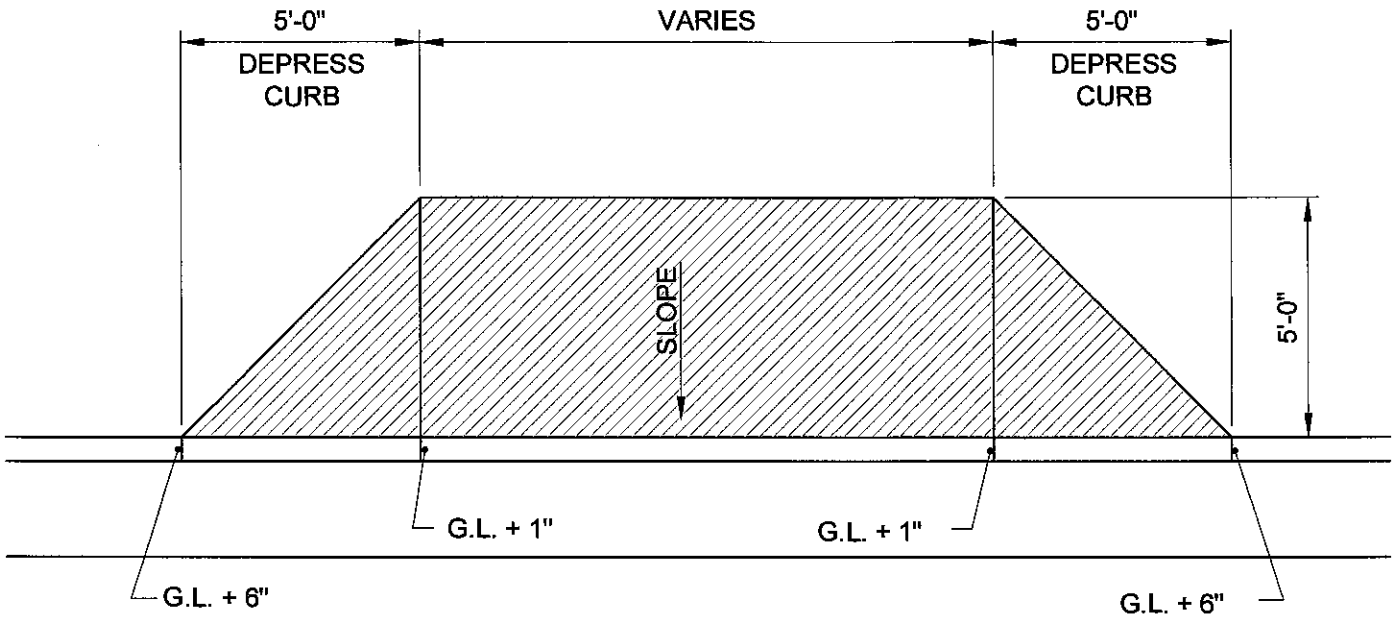

PLAN

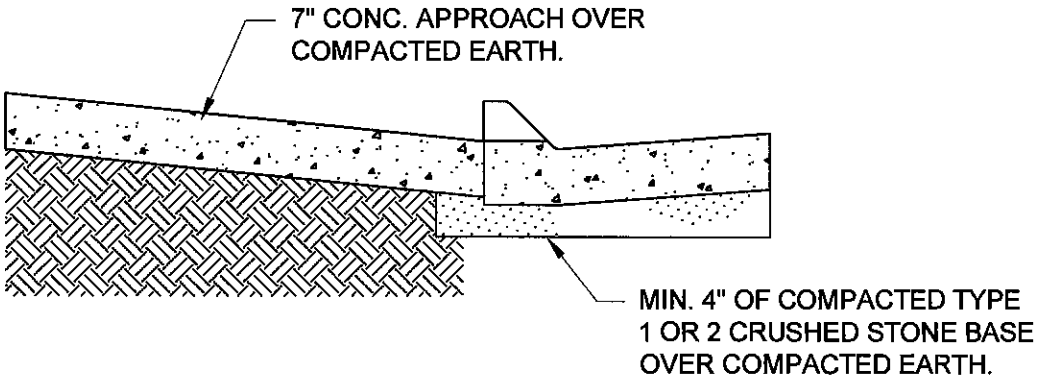

SECTION

SAI	*Sprenkle & Associates, Inc.* *Consulting Engineers & Land Surveyors*	DRIVEWAY ENTRANCE DETAIL

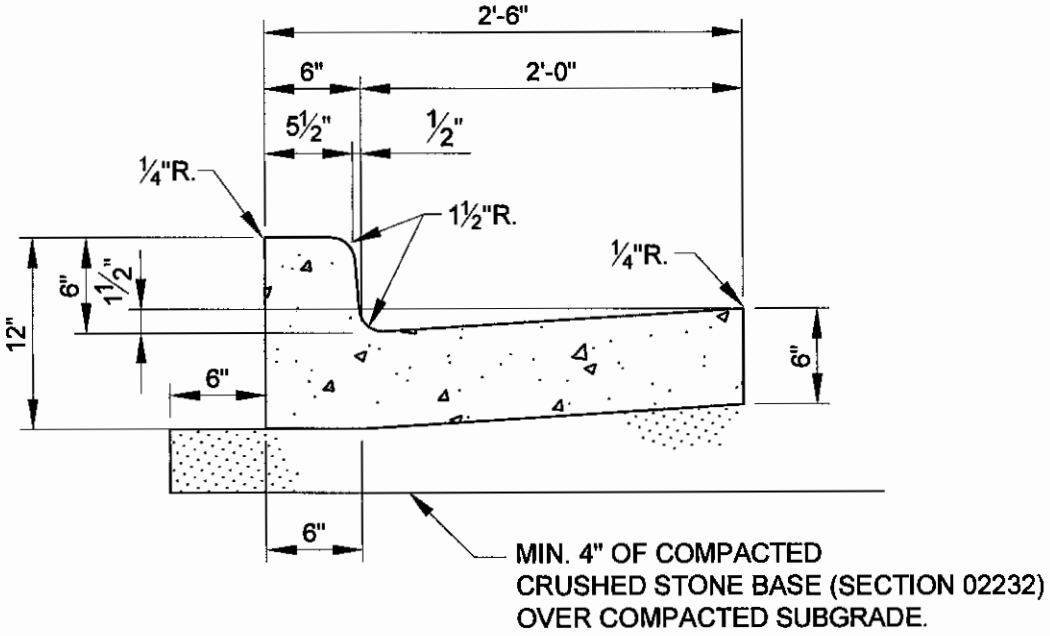

CURB & GUTTER SHALL HAVE CRACK CONTROL JOINTS AND EXPANSION JOINTS AT LOCATIONS INDICATED ON PLANS AND SHALL BE BUILT IN ACCORDANCE WITH SECTION 03300 OF STANDARD SPECIFICATIONS.

SAI	*Sprenkle & Associates, Inc.* *Consulting Engineers & Land Surveyors*	STANDARD CURB AND GUTTER DETAIL

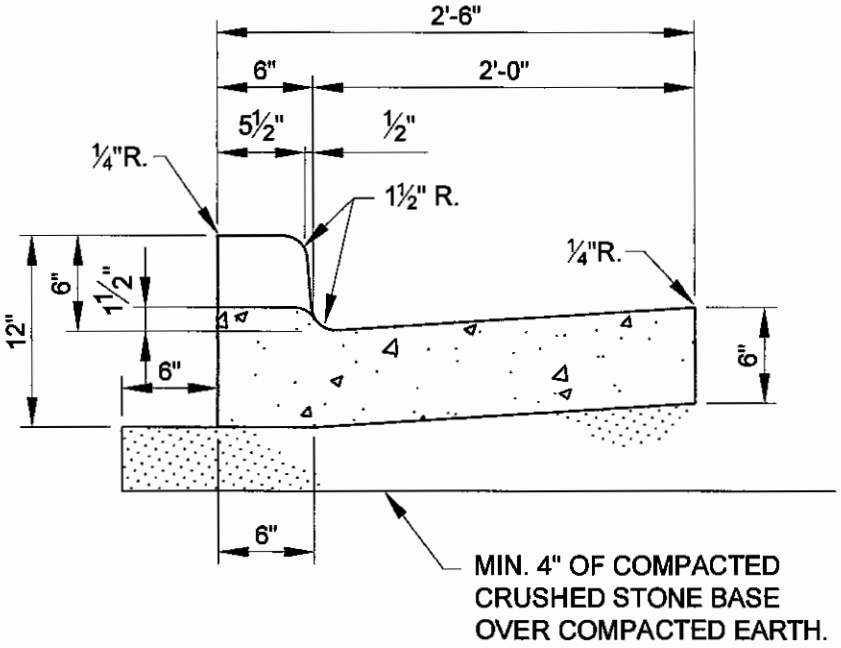

SAI	*Sprenkle & Associates, Inc.* *Consulting Engineers & Land Surveyors*	DEPRESSED CURB AND GUTTER DETAIL

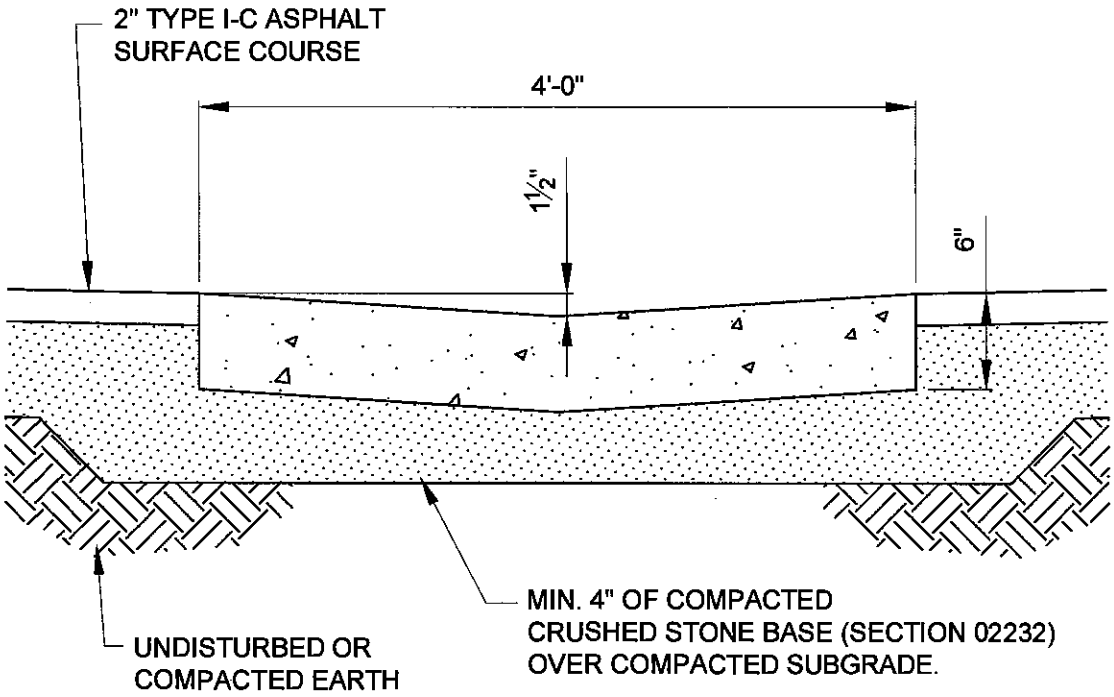

SAI	*Sprenkle & Associates, Inc.* *Consulting Engineers & Land Surveyors*	GUTTER DETAIL

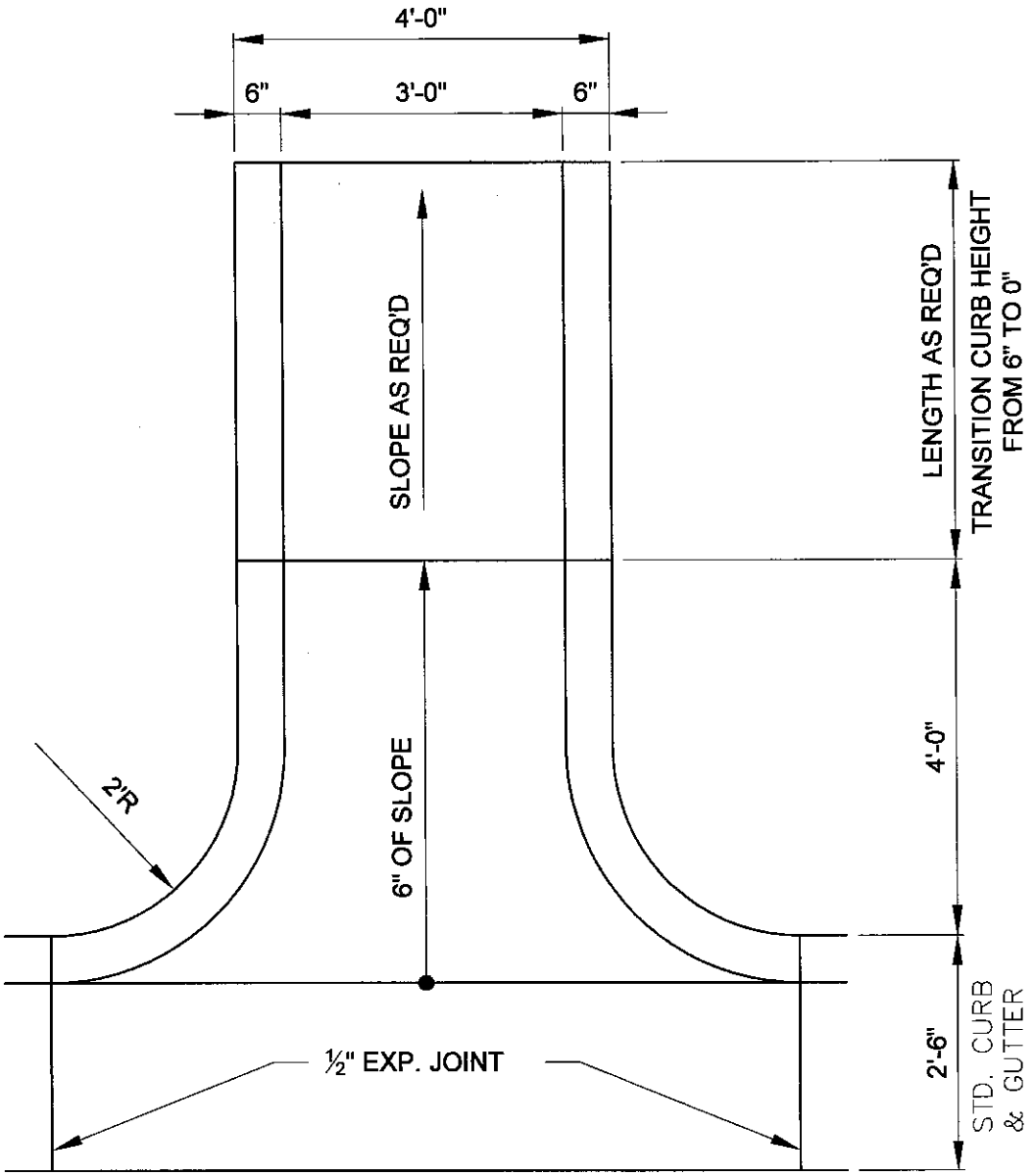

PLAN

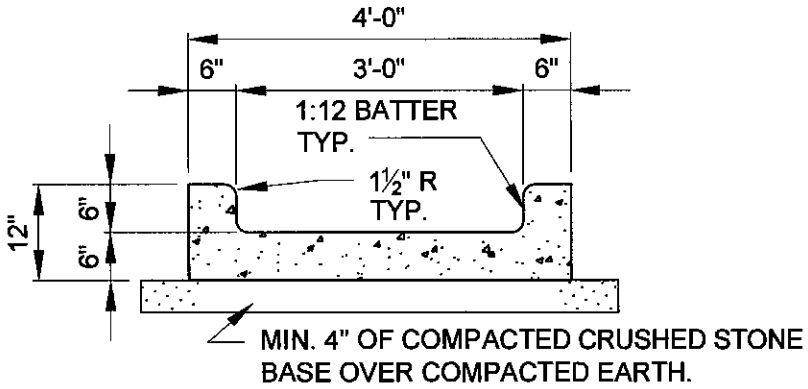

SECTION

SAI	*Sprenkle & Associates, Inc.* *Consulting Engineers & Land Surveyors*	CURB FLUME DETAIL

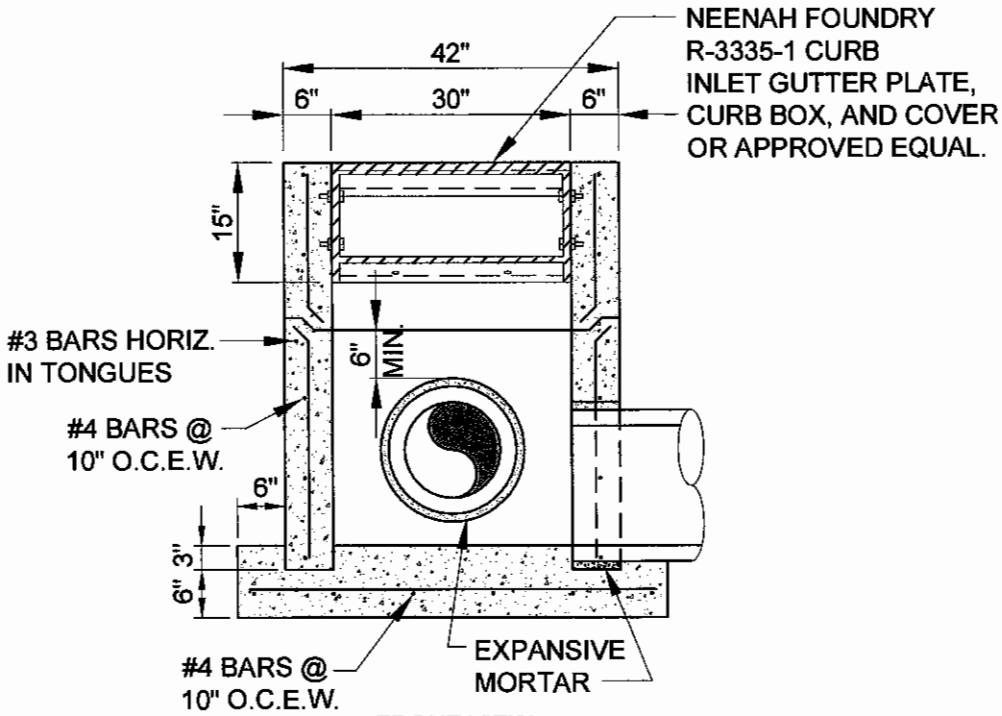

FRONT VIEW

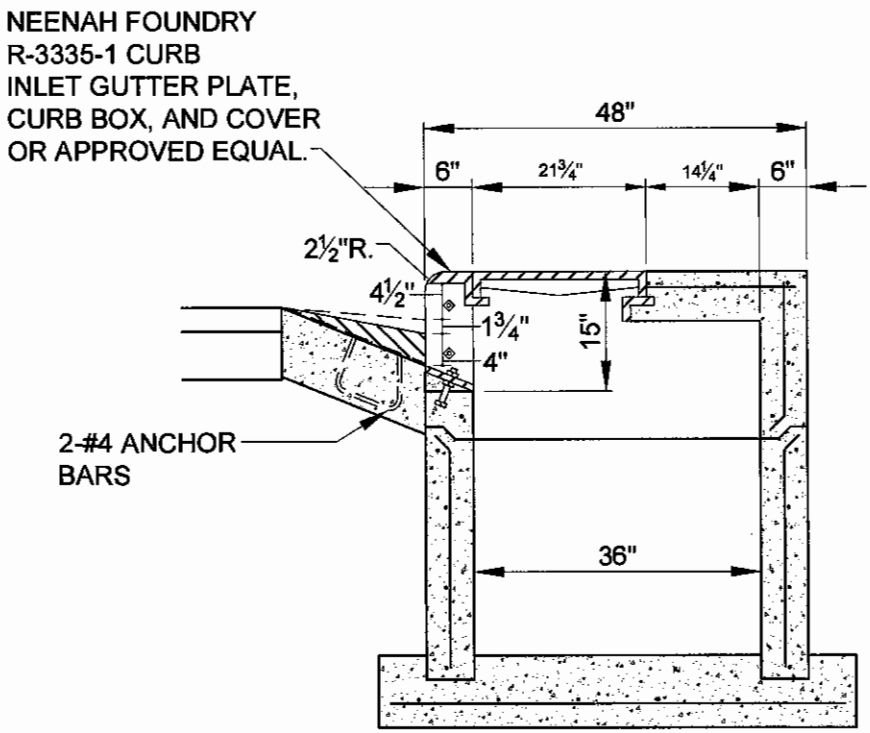

SIDE VIEW

SAI	*Sprenkle & Associates, Inc.* *Consulting Engineers & Land Surveyors*	TYPE "B" SINGLE CURB INLET DETAIL